YAMAHA

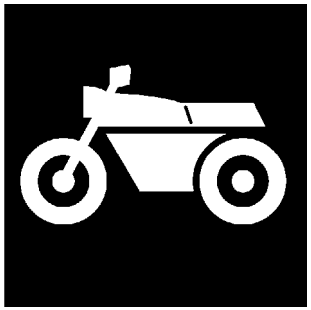

PARTS CATALOGUE

XP500A (4B56) EUROPE,SOUTH AFRICA

1G4B5-300EA

( )

YAMAHA GENUINE Parts & Accessories

2008-10-30

NEWS NO.	DATE	COMMENT
PE0-MC-080065	Oct.,27,2008	MOD:XP500A(4B56) FIG.29/31 LIST/ILLUSTRATION CORRECTION

www.tmaxclub.ru

www.tmaxclub.ru

XP500A
PARTS CATALOGUE
©2008 by Yamaha Motor Co., Ltd.
1st edition, January 2008
All rights reserved.
Any reprinting or unauthorized use
without the written permission of
Yamaha Motor Co., Ltd.
is expressly prohibited.
Printed in Japan.

FOREWORD

This Parts Catalogue is related to the parts for the model(s) on the cover page. When you are ordering replacement parts, please refer to this Parts Catalogue and quote both part numbers and part names correctly.

1. Modifications or additions which have been made after the issue of the Parts Catalogue will be announced in the Parts News.
   It is advisable that you make the necessary corrections to the Parts Catalogue according to the Parts News.

2. Abbreviations
   The following abbreviations are used in this Parts Catalogue.

   "UR" Use specified parts number.
   "UN" Use as many as needed.
   "AP" Alternate Parts
   "LM" Locally Made (Parts need to be ordered locally)
   "F#" Frame No. (Applicable machine No.)
   "O/S" Over Size

3. The number of components for assembly
   - Parts, which are to be supplied in an assembly, are listed with a dot (.) in front of the part name as shown below.
   - The numeral appearing to the right of each component part indicates the quantity of parts for each assembly unit.

PART NO.	DESCRIPTION	Q'TY	REMARKS
2F5–83310–60	FRONT FLASHER LIGHT ASSY	2	
115–83311–60	.BULB (6V–18W)	1	

4. Applicable colours of graphics are represented in the "REMARKS" as shown below.

PART NO.	DESCRIPTION	Q'TY	REMARKS
2N4–24110–00–X5	FUEL TANK COMP.	2	MXR
3J1–24240–10	.GRAPHIC, FUEL TANK	1	FOR MXR

5. Note that the illustrations for reference in finding parts numbers are not to be used for assembling. When assembling, please use the applicable service manual.

6. The asterisk (*) before a reference number indicates modified items after the first edition.

www.tmaxclub.ru

7. Applicable Serial No.

Engine Serial No.

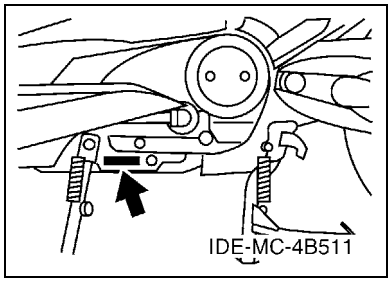

Frame Serial No.

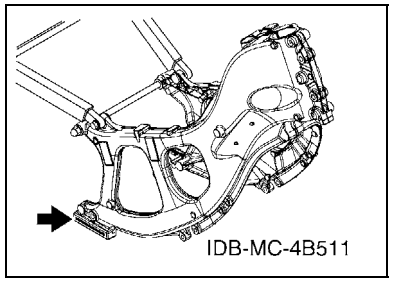

8. Applicable Colour Code (The (*) mark shows Model colour.)

Abbreviation	Colour Name	Colour Code
DPBMX(*)	DULL PURPLISH BLUE METALLIC X	1090
MBL2	MAT BLACK 2	0582
MBNM1	MAT BLUISH GRAY METALLIC 1	1088
MNM1(*)	MAT GRAY METALLIC 1	1089
S3(*)	SILVER 3	0791
SMX(*)	BLACK METALLIC X	0903
YB	YAMAHA BLACK	0033

www.tmaxclub.ru

MODEL LABEL

(1) A label called “Model Label” is affixed in the location as indicated in (3) below.
When using this parts catalogue, please be sure to cross–reference the “model code – production code No.” in the catalogue with the “model code – production code No.” indicated on the Model Label affixed onto the product concerned.

(2) “Model Label” Indication

a b ○ xxxx – xxx ● x c	a: Model Type Code b: Production Code No. c: Colouring Type

○ 4TW1–010 ● A

(3) Model Label Affixing Location

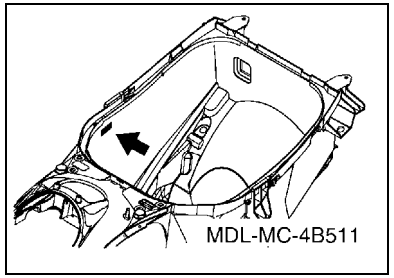

(4) Colouring Information

Model Code	Colouring Type Code	Colour Code	Colour Name	Abbreviation
4B56	A	1089	MAT GRAY METALLIC 1	MNM1
	B	1090	DULL PURPLISH BLUE METALLIC X	DPBMX
	C	0791	SILVER 3	S3
	D	0903	BLACK METALLIC X	SMX

(5) Model Code – Production Code Number of Model Listed in This Parts Catalogue

Model Code	Production Code No.	Country (destination)
4B56	010	EUROPE
	050	FINLAND
		GREECE
	060	UNITED KINGDOM
	070	IRELAND
		SOUTH AFRICA

CONTENTS

ENGINE

CYLINDER 1
CRANKSHAFT & PISTON 3
VALVE 5
CAMSHAFT & CHAIN 7
WATER PUMP 8
RADIATOR & HOSE 9
OIL PUMP 11
INTAKE 12
INTAKE 2 14
EXHAUST 15
CRANKCASE 16
CRANKCASE COVER 1 17
CRANKCASE COVER 2 18
STARTER 20
CLUTCH 21
CLUTCH 2 22
TRANSMISSION 24
SUB TRANSMISSION 25

CHASSIS

FRAME 27
FENDER 30
SIDE COVER 31
SIDE COVER 2 34
REAR ARM & SUSPENSION 36
STEERING 37
FRONT FORK 38
FUEL TANK 40
SEAT 41
SEAT 2 43
FRONT WHEEL 45
FRONT BRAKE CALIPER 46
REAR WHEEL 48
REAR BRAKE CALIPER 49
STEERING HANDLE & CABLE 50
FRONT MASTER CYLINDER 51
STAND & FOOTREST 54
STAND & FOOTREST 2 56
LEG SHIELD 58
WINDSHIELD 61
GENERATOR 64
FLASHER LIGHT 65
METER 66
HEADLIGHT 67
TAILLIGHT 68
HANDLE SWITCH & LEVER 69
ELECTRICAL 1 70
ELECTRICAL 2 73
ELECTRICAL 3 74

INDEX

NUMERICAL INDEX 75

www.tmaxclub.ru

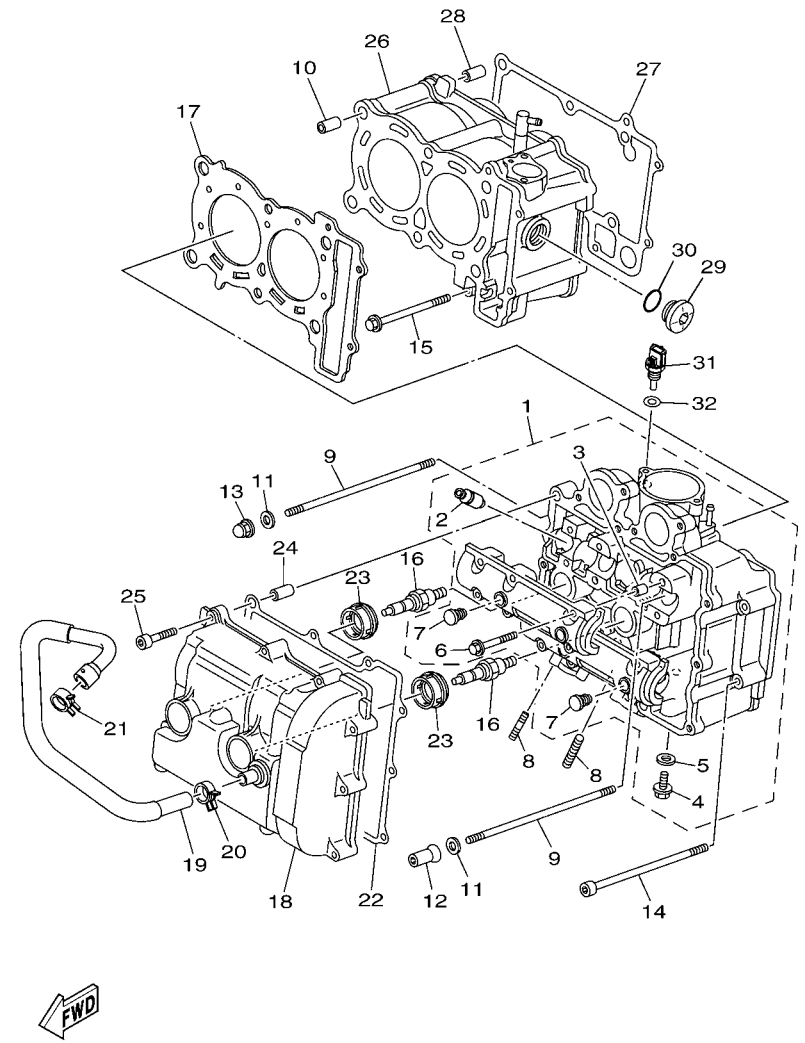

4B51300-G010

FIG. 1 CYLINDER

REF. NO.	PART NO.	DESCRIPTION	4B56					REMARKS
1	4B5–11101–01	CYLINDER HEAD ASSY	1					
2	5GJ–11133–10	.GUIDE, VALVE 1	8					
3	91808–16023	.PIN, DOWEL	4					
4	95022–08012	.BOLT, FLANGE	1					
5	90430–08119	.GASKET	1					
6	90105–06026	.BOLT, FLANGE	12					
7	90338–08174	.PLUG	4					
8	95612–08620	BOLT, STUD	4					
9	90116–09584	BOLT, STUD	6					
10	93612–16254	PIN, DOWEL	2					
11	90201–090P4	WASHER, PLATE	6					
12	90179–09612	NUT	4					
13	90179–09003	NUT	2					
14	90110–06021	BOLT, HEXAGON SOCKET HEAD	2					
15	95022–06085	BOLT, FLANGE	1					
16	94701–00353	PLUG, SPARK (NGK CR7E)	2					
17	5GJ–11181–00	GASKET, CYLINDER HEAD 1	1					
18	15B–11190–00	COVER, CYLINDER HEAD 1	1					
19	4B5–11166–00	PIPE, BREATHER 1	1					
20	90467–13133	CLIP	1					
21	90467–16181	CLIP	1					
22	5GJ–11193–01	GASKET, HEAD COVER 1	1					
23	5GJ–11195–00	GASKET	2					
24	99530–10116	PIN, DOWEL	2					
25	91312–06035	BOLT	10					
26	15B–W1131–00	CYLINDER	1					
27	5GJ–11351–01	GASKET, CYLINDER	1					

.maxclub.ru

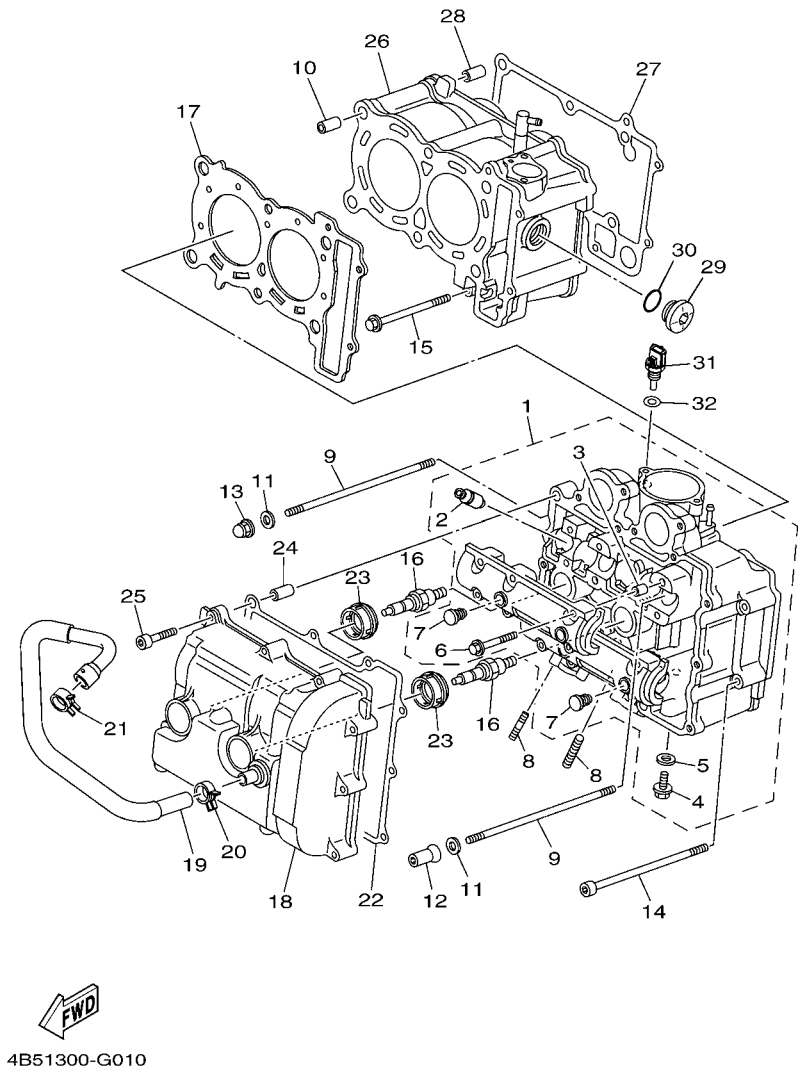

4B51300-G010

FIG. 1 CYLINDER

REF. NO.	PART NO.	DESCRIPTION	4B56					REMARKS
28	93612–16254	PIN, DOWEL	2					
29	4H7–15189–00	PLUG	1					
30	93210–22382	O-RING	1					
31	5PS–85790–00	THERMOSENSOR ASSY	1					
32	90430–12202	GASKET	1					

maxclub.ru

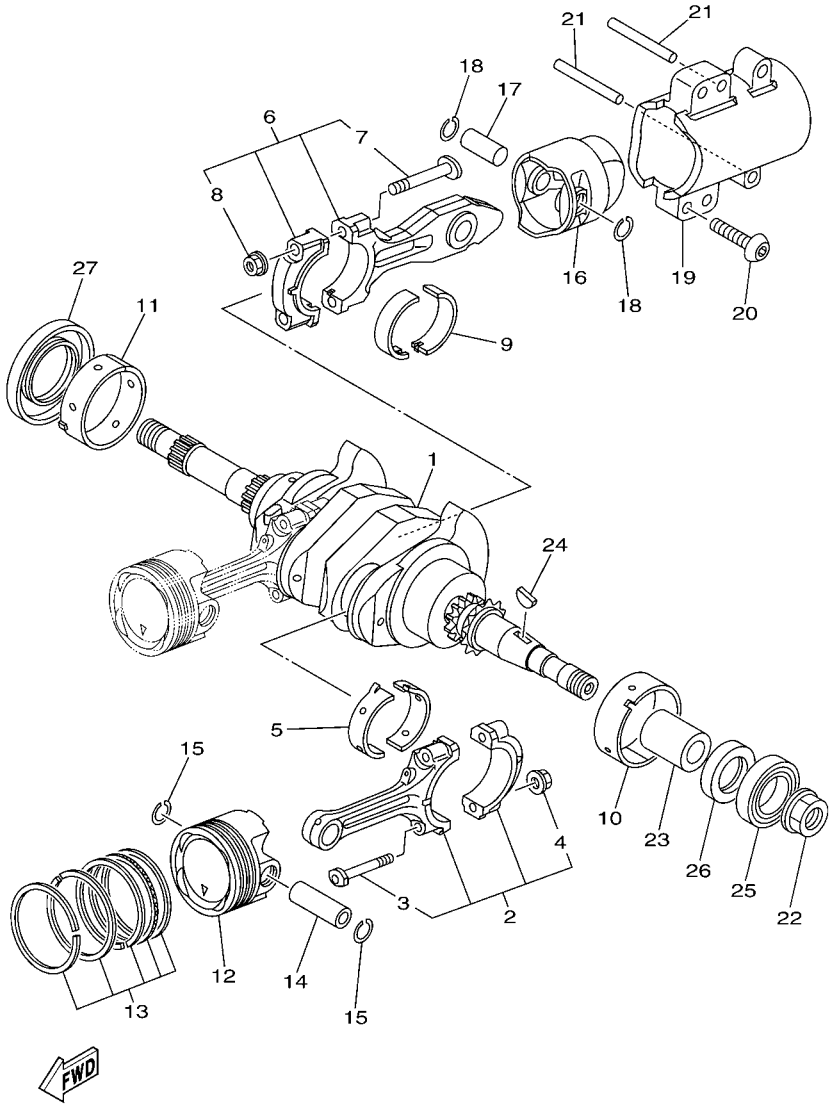

15B1300-F020

FIG. 2 CRANKSHAFT & PISTON

REF. NO.	PART NO.	DESCRIPTION	4B56					REMARKS
1	5VU–11400–00	CRANKSHAFT ASSY	1					
2	5VU–11650–00	CONNECTING ROD ASSY	2					
3	5VU–11654–00	.BOLT, CONNECTING ROD	2					
4	90179–07652	.NUT	2					
5	5GJ–11656–00	PLANE BEARING, CONNECTING ROD	4					UR BLUE
	5GJ–11656–10	PLANE BEARING, CONNECTING ROD	4					UR BLACK
	5GJ–11656–20	PLANE BEARING, CONNECTING ROD	4					UR BROWN
	5GJ–11656–30	PLANE BEARING, CONNECTING ROD	4					UR GREEN
6	5GJ–11660–11	CONNECTING ROD ASSY	1					
7	4X7–11654–01	.BOLT, CONNECTING ROD	2					
8	90179–09379	.NUT	2					
9	5GJ–11656–00	PLANE BEARING, CONNECTING ROD	2					UR BLUE
	5GJ–11656–10	PLANE BEARING, CONNECTING ROD	2					UR BLACK
	5GJ–11656–20	PLANE BEARING, CONNECTING ROD	2					UR BROWN
	5GJ–11656–30	PLANE BEARING, CONNECTING ROD	2					UR GREEN
10	5GJ–11416–00	PLANE BEARING, CRANKSHAFT 1	1					UR BLUE
	5GJ–11416–10	PLANE BEARING, CRANKSHAFT 1	1					UR BLACK
	5GJ–11416–20	PLANE BEARING, CRANKSHAFT 1	1					UR BROWN
	5GJ–11416–30	PLANE BEARING, CRANKSHAFT 1	1					UR GREEN
	5GJ–11416–40	PLANE BEARING, CRANKSHAFT 1	1					UR YELLOW
	5GJ–11416–A0	PLANE BEARING, CRANKSHAFT 1	1					UR WHITE
11	5GJ–11417–00	PLANE BEARING, CRANKSHAFT 2	1					UR BLUE
	5GJ–11417–10	PLANE BEARING, CRANKSHAFT 2	1					UR BLACK
	5GJ–11417–20	PLANE BEARING, CRANKSHAFT 2	1					UR BROWN
	5GJ–11417–30	PLANE BEARING, CRANKSHAFT 2	1					UR GREEN
	5GJ–11417–40	PLANE BEARING, CRANKSHAFT 2	1					UR YELLOW
	5GJ–11417–A0	PLANE BEARING, CRANKSHAFT 2	1					UR WHITE

maxclub.ru

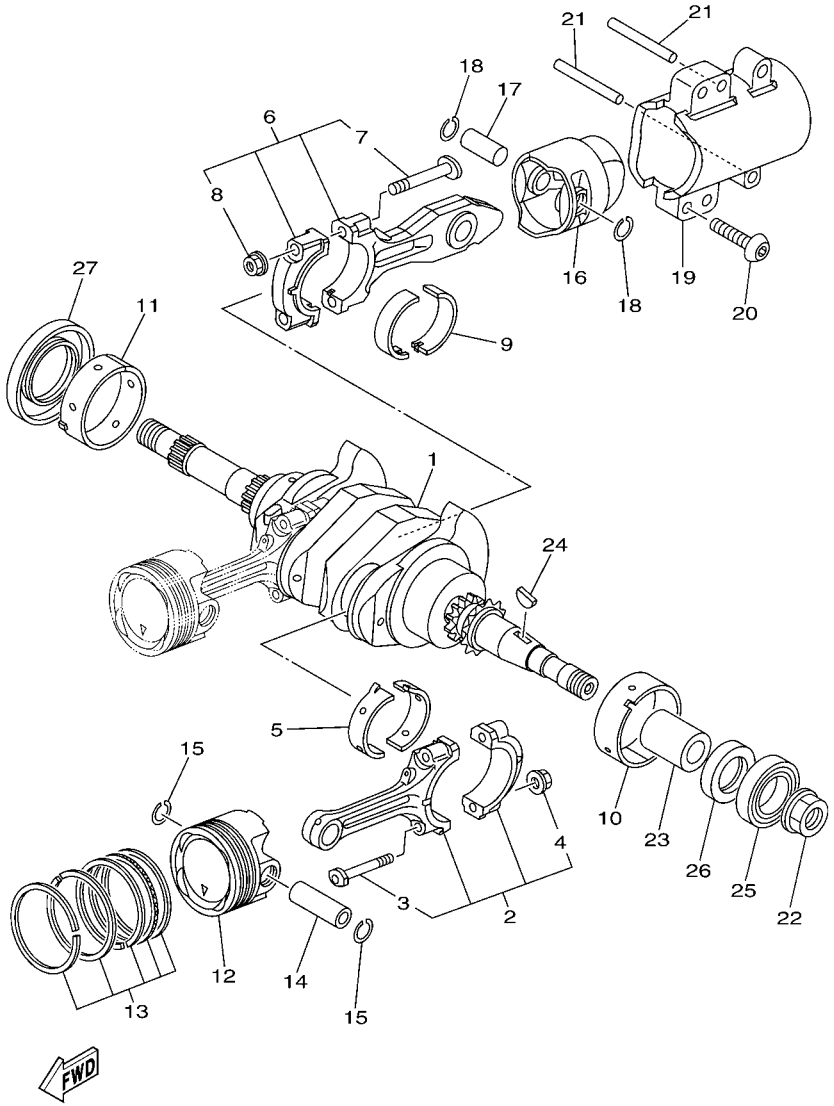

15B1300-F020

FIG. 2 CRANKSHAFT & PISTON

REF. NO.	PART NO.	DESCRIPTION	4B56					REMARKS
12	5VU–11631–00	PISTON (STD)	2					
13	5GJ–11603–00	PISTON RING SET (STD)	2					
14	5VU–11633–00	PIN, PISTON	2					
15	93450–16159	CIRCLIP	4					
16	5GJ–11642–10–A0	PISTON 2 (STD)	1					
17	5GJ–11455–10	SHAFT 1	1					
18	93450–16068	CIRCLIP	2					
19	5GJ–11312–00	SLEEVE, CYLINDER	1					
20	90111–10026	BOLT,HEX. SOCKET BUTTON	4					
21	93608–60001	PIN, DOWEL	2					
22	90179–18007	NUT	1					
23	90387–18001	COLLAR	1					
24	90280–05013	KEY, WOODRUFF	1					
25	93306–90602	BEARING	1					
26	93101–30001	OIL SEAL	1					
27	93102–44008	OIL SEAL	1					

maxclub.ru

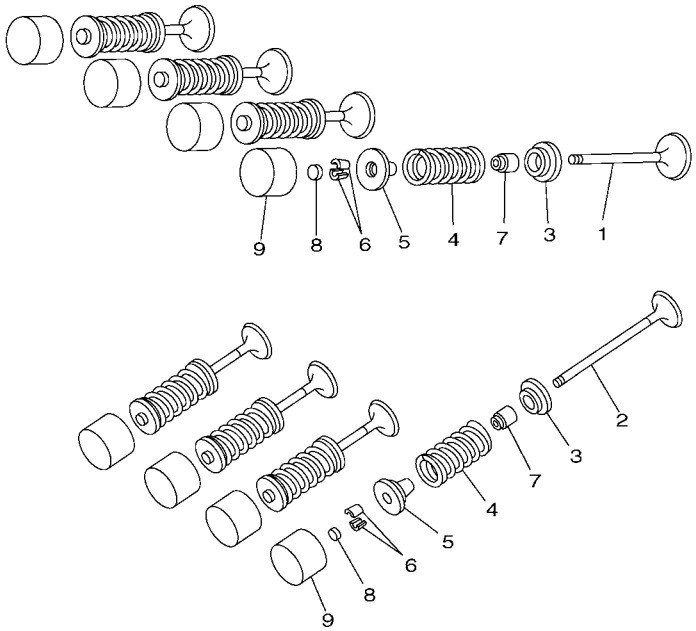

5GJ1300-1030

FIG. 3 VALVE

REF. NO.	PART NO.	DESCRIPTION	4B56					REMARKS
1	5GJ–12111–00	VALVE, INTAKE	4					
2	5GJ–12121–01	VALVE, EXHAUST	4					
3	5EB–12126–00	SEAT, VALVE SPRING 2	8					
4	4GY–12113–00	SPRING, VALVE INNER	8					
5	5EB–12127–00	RETAINER, VALVE SPRING	8					
6	1HX–12118–00	COTTER, VALVE	16					
7	4TV–12119–00	SEAL, VALVE STEM	8					
8	1HX–12168–00	PAD, ADJUSTING 2 (1.20)	8					UR
	1HX–12168–20	PAD, ADJUSTING 2 (1.25)	8					UR
	1HX–12168–40	PAD, ADJUSTING 2 (1.30)	8					UR
	1HX–12168–60	PAD, ADJUSTING 2 (1.35)	8					UR
	1HX–12168–80	PAD, ADJUSTING 2 (1.40)	8					UR
	1HX–12168–A0	PAD, ADJUSTING 2 (1.45)	8					UR
	1HX–12168–F0	PAD, ADJUSTING 2 (1.50)	8					UR
	1HX–12168–H1	PAD, ADJUSTING 2 (1.55)	8					UR
	1HX–12168–K1	PAD, ADJUSTING 2 (1.60)	8					UR
	1HX–12168–M1	PAD, ADJUSTING 2 (1.65)	8					UR
	1HX–12168–R1	PAD, ADJUSTING 2 (1.70)	8					UR
	1HX–12168–U1	PAD, ADJUSTING 2 (1.75)	8					UR
	1HX–12168–W1	PAD, ADJUSTING 2 (1.80)	8					UR
	1HX–12168–Y1	PAD, ADJUSTING 2 (1.85)	8					UR
	1HX–12169–11	PAD, ADJUSTING 2 (1.90)	8					UR
	1HX–12169–31	PAD, ADJUSTING 2 (1.95)	8					UR
	1HX–12169–50	PAD, ADJUSTING 2 (2.00)	8					UR
	1HX–12169–70	PAD, ADJUSTING 2 (2.05)	8					UR
	1HX–12169–90	PAD, ADJUSTING 2 (2.10)	8					UR
	1HX–12169–E0	PAD, ADJUSTING 2 (2.15)	8					UR

maxclub.ru

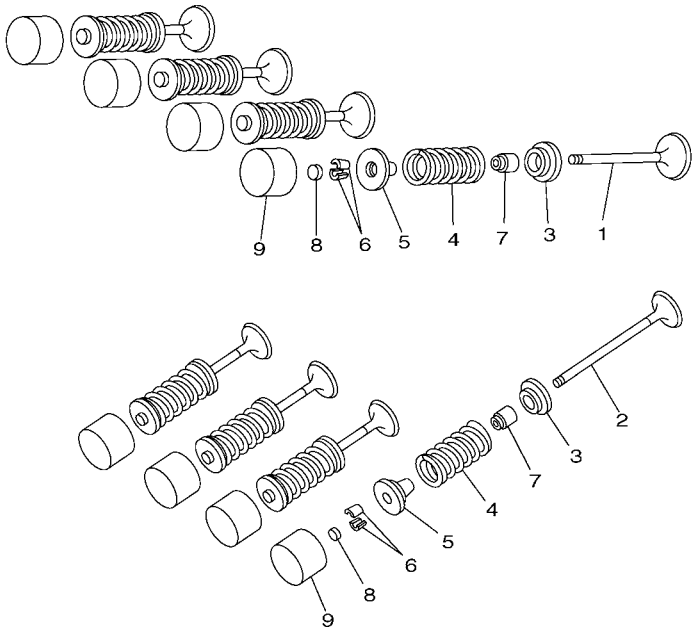

5GJ1300-1030

FIG. 3 VALVE

REF. NO.	PART NO.	DESCRIPTION	4B56					REMARKS
8	1HX–12169–G0	PAD, ADJUSTING 2 (2.20)	8					UR
	1HX–12169–J0	PAD, ADJUSTING 2 (2.25)	8					UR
	1HX–12169–L0	PAD, ADJUSTING 2 (2.30)	8					UR
	1HX–12169–N0	PAD, ADJUSTING 2 (2.35)	8					UR
	1HX–12169–T0	PAD, ADJUSTING 2 (2.40)	8					UR
9	5EB–12153–10	LIFTER, VALVE	8					UR YELLOW
	5EB–12153–09	LIFTER, VALVE (O/S)	8					AP GREEN

maxclub.ru

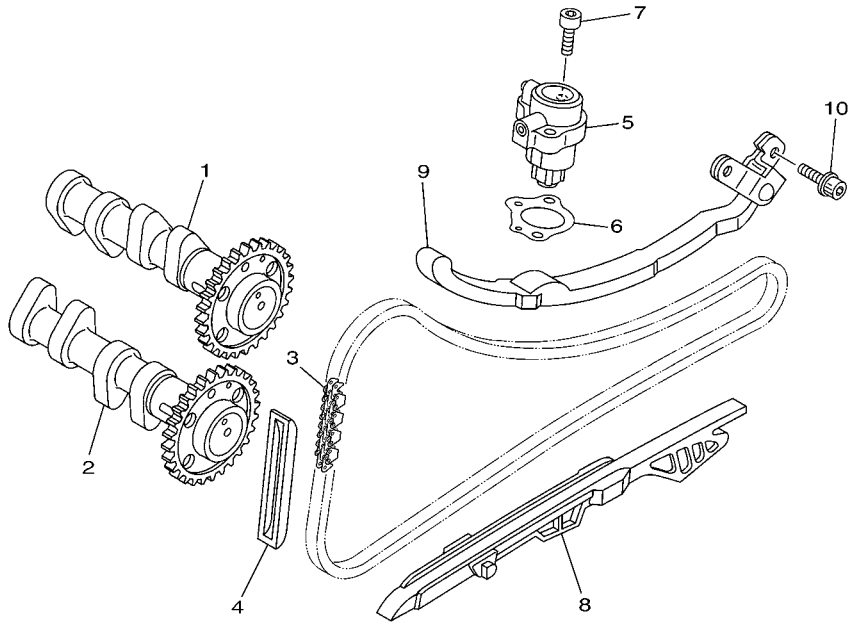

15B1300-F040

FIG. 4 CAMSHAFT & CHAIN

REF. NO.	PART NO.	DESCRIPTION	4B56					REMARKS
1	5VU–12170–10	CAMSHAFT ASSY 1	1					
2	5VU–12180–10	CAMSHAFT ASSY 2	1					
3	94582–18132	CHAIN	1					
4	5BE–12241–00	GUIDE, STOPPER 2	1					
5	15B–12210–00	TENSIONER ASSY, CAM CHAIN	1					
6	15B–12213–00	GASKET, TENSIONER CASE	1					
7	91312–06020	BOLT	2					
8	5VU–12251–00	DAMPER, CHAIN 1	1					
9	5GJ–12252–00	DAMPER, CHAIN 2	1					
10	90110–06218	BOLT, HEXAGON SOCKET HEAD	2					

.maxclub.ru

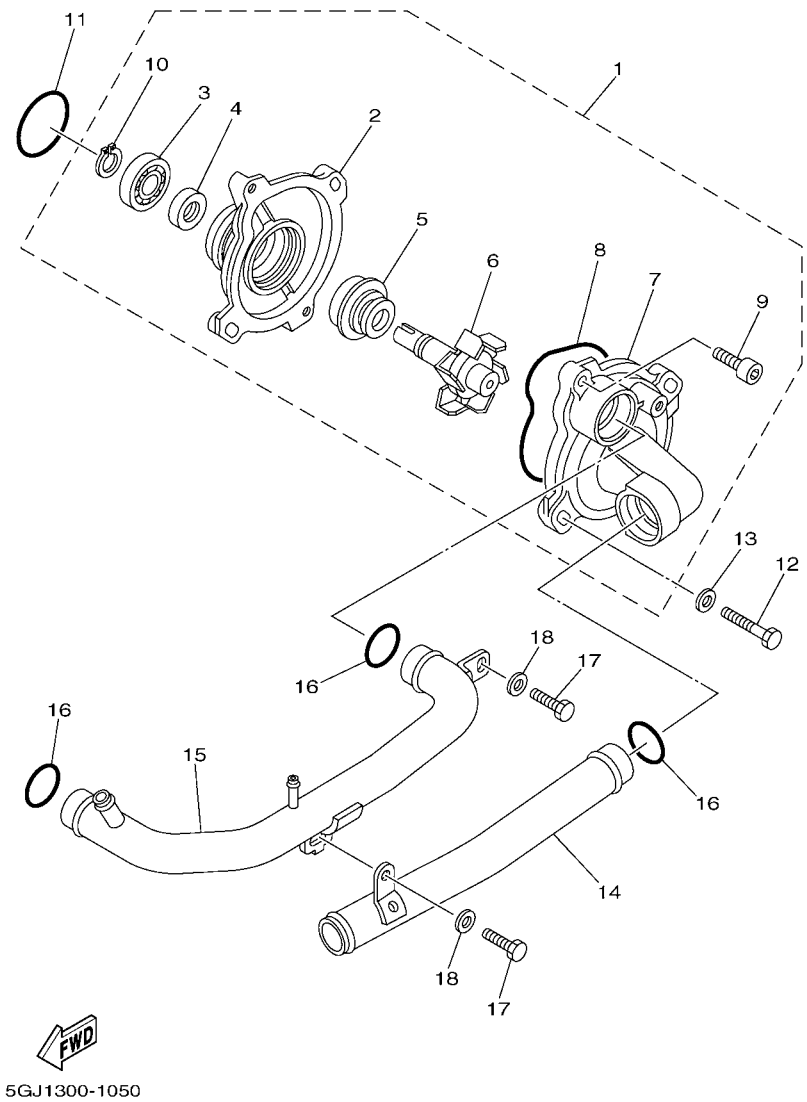

FIG. 5 WATER PUMP

REF. NO.	PART NO.	DESCRIPTION	4B56					REMARKS
1	15B–12420–00	WATER PUMP ASSY	1					
2	5VU–12421–00	.HOUSING, WATER PUMP	1					
3	93306–00106	.BEARING	1					
4	93102–12442	.OIL SEAL	1					
5	11H–12438–10	.SEAL, MECHANICAL	1					
6	5VU–12450–00	.IMPELLER SHAFT ASSY	1					
7	5GJ–12422–02	.COVER, HOUSING	1					
8	1WG–12439–00	.O-RING	1					
9	91312–06020	.BOLT	2					
10	99009–12400	.CIRCLIP	1					
11	93210–33133	O-RING	1					
12	97022–06030	BOLT	2					
13	92902–06600	WASHER, PLATE	2					
14	4B5–12481–00	PIPE 1	1					
15	4B5–12482–00	PIPE 2	1					
16	93210–21190	O-RING	3					
17	97022–06016	BOLT	2					
18	92902–06600	WASHER, PLATE	2					

maxclub.ru

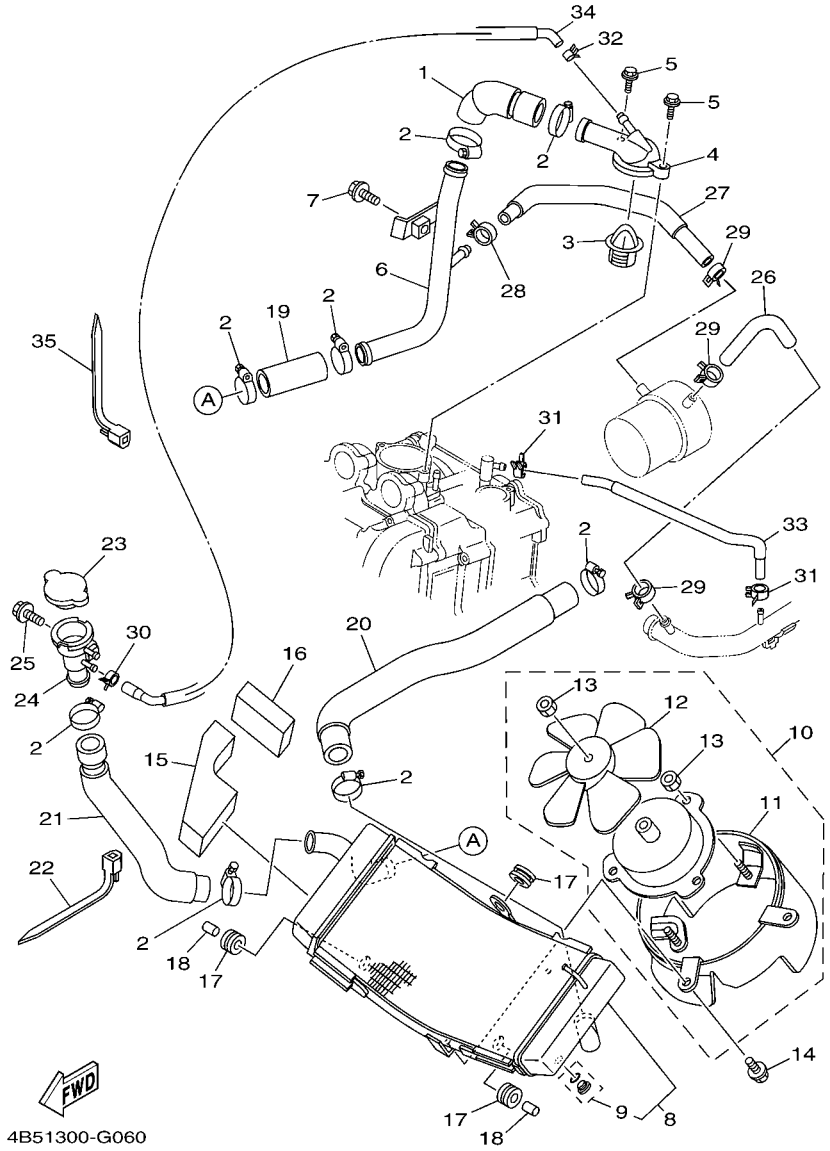

FIG. 6 RADIATOR & HOSE

REF. NO.	PART NO.	DESCRIPTION	4B56					REMARKS
1	4B5–12483–00	PIPE 3	1					
2	90450–32015	HOSE CLAMP ASSY	8					
3	4JH–12410–00	THERMOSTAT ASSY	1					
4	4B5–12413–00	COVER, THERMOSTAT	1					
5	95022–06025	BOLT, FLANGE	2					
6	4B5–12484–00	PIPE 4	1					
7	95022–06012	BOLT, FLANGE	1					
8	4B5–12461–00	RADIATOR ASSY	1					
9	5VU–12478–00	.COCK, DRAIN	1					
10	4B5–12405–00	BLOWER ASSY	1					
11	4B5–12620–00	.AIR SHROUD ASSY	1					
12	5VU–12611–00	.FAN	1					
13	95702–05500	.NUT, WITH WASHER	4					
14	5GJ–12675–00	BOLT, BLOWER HOLDING	3					
15	4B5–28455–00	DAMPER, 4	1					
16	4B5–2837J–00	DAMPER 5	1					
17	90480–16301	GROMMET	3					
18	90387–07020	COLLAR	2					
19	4B5–12485–00	PIPE 5	1					
20	4B5–12476–00	PIPE 6	1					
21	4B5–12477–00	PIPE 7	1					
22	90464–15195	CLAMP	1					
23	5SL–12462–00	CAP, RADIATOR	1					
24	5GJ–12591–00	SUPT, FILLER NECK	1					
25	95802–06012	BOLT, FLANGE	1					
26	5GJ–1243A–00	HOSE 1	1					
27	4B5–1243E–00	HOSE 2	1					

.maxclub.ru

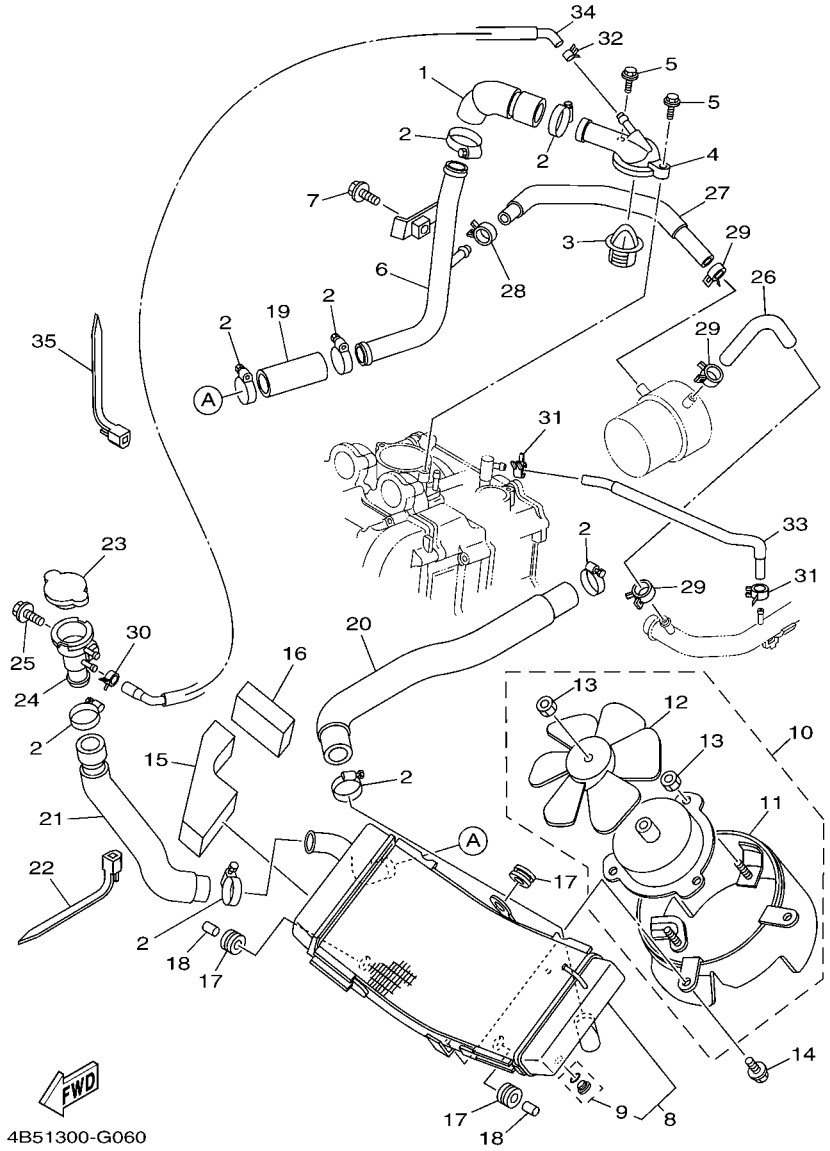

FIG. 6 RADIATOR & HOSE

REF. NO.	PART NO.	DESCRIPTION	4B56					REMARKS
28	90467–15001	CLIP	1					
29	90467–15141	CLIP	3					
30	90467–10038	CLIP	1					
31	90467–10035	CLIP	2					
32	90467–09120	CLIP	1					
33	5GJ–12589–00	HOSE 6	1					
34	4B5–12551–00	HOSE 7	1					
35	90464–13073	CLAMP	1					

.maxclub.ru

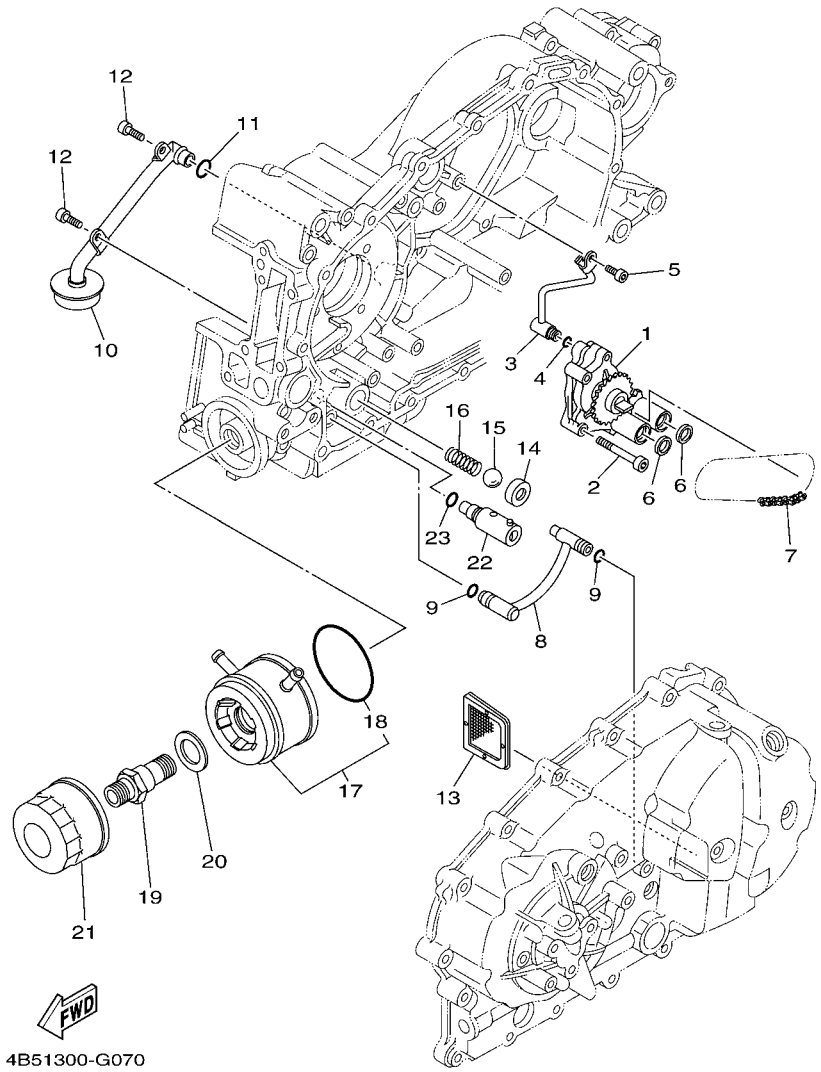

FIG. 7 OIL PUMP

REF. NO.	PART NO.	DESCRIPTION	4B56					REMARKS
1	5GJ–13300–00	OIL PUMP ASSY	1					
2	92012–06050	BOLT, BUTTON HEAD	3					
3	5GJ–13161–00	PIPE, DELIVERY 1	1					
4	93210–06422	O-RING	1					
5	90110–06168	BOLT, HEXAGON SOCKET HEAD	1					
6	5GJ–13475–00	GASKET	2					
7	94580–25058	CHAIN (DID25 58L)	1					
8	5GJ–13405–00	OIL PIPE COMP. 1	1					
9	93210–09525	O-RING	2					
10	5GJ–13410–00	STRAINER HOUSING ASSY	1					
11	93210–14579	O-RING	1					
12	90110–06168	BOLT, HEXAGON SOCKET HEAD	2					
13	22F–13411–01	STRAINER, OIL	1					
14	3LD–13113–00	SEAT, CHECK BALL	1					
15	93505–08030	BALL	1					
16	90501–104F9	SPRING, COMPRESSION	1					
17	4B5–13470–00	OIL COOLER ASSY	1					
18	5JW–13473–00	.O-RING	1					
19	90401–20005	BOLT, UNION	1					
20	90201–25017	WASHER, PLATE	1					
21	5DM–13440–00	ELEMENT ASSY, OIL CLEANER	1					
22	4G0–13490–01	RELIEF VALVE ASSY	1					
23	93210–10096	O-RING	1					

.maxclub.ru

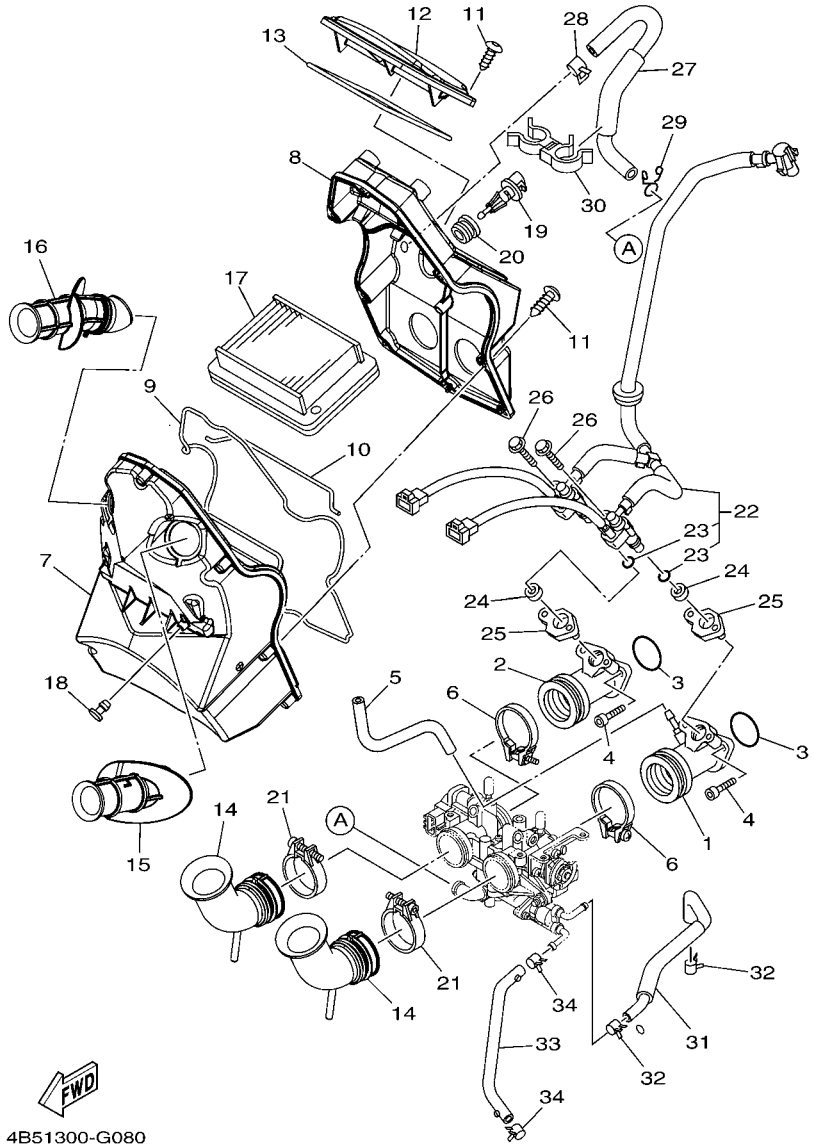

FIG. 8 INTAKE

REF. NO.	PART NO.	DESCRIPTION	4B56					REMARKS
1	5VU–13586–00	JOINT, CARBURETOR 1	1					
2	5VU–13596–00	JOINT, CARBURETOR 2	1					
3	93210–32738	O-RING	2					
4	91312–06020	BOLT	4					
5	90445–08017	HOSE	1					
6	90450–47002	HOSE CLAMP ASSY	2					
7	4B5–14411–00	CASE, AIR CLEANER 1	1					
8	4B5–14412–00	CAP, CLEANER CASE 1	1					
9	4B5–14452–00	SEAL	1					
10	4B5–14457–00	SEAL	1					
11	97702–50025	SCREW, TAPPING	12					
12	4B5–1441A–00	COVER, CLEANER CASE 1	1					
13	4B5–14462–00	SEAL	1					
14	4B5–14453–00	JOINT, AIR CLEANER 1	2					
15	4B5–14437–00	DUCT	1					
16	4B5–1443A–00	DUCT	1					
17	4B5–14451–00	ELEMENT, AIR CLEANER	1					
18	90338–05056	PLUG	1					
19	5VU–85886–00	SENSOR, AIR TEMPRATURE	1					
20	5CA–14435–00	GROMMET	1					
21	90450–47002	HOSE CLAMP ASSY	2					
22	4B5–13930–00	PIPE INLET ASSEMBLY	1					
23	5CA–14147–00	.O-RING	2					
24	90430–09002	GASKET	2					
25	15B–13556–00	GASKET, MANIFOLD	2					
26	95812–06030	BOLT, FLANGE	2					
27	4B5–13545–00	HOSE 1	1					

.maxclub.ru

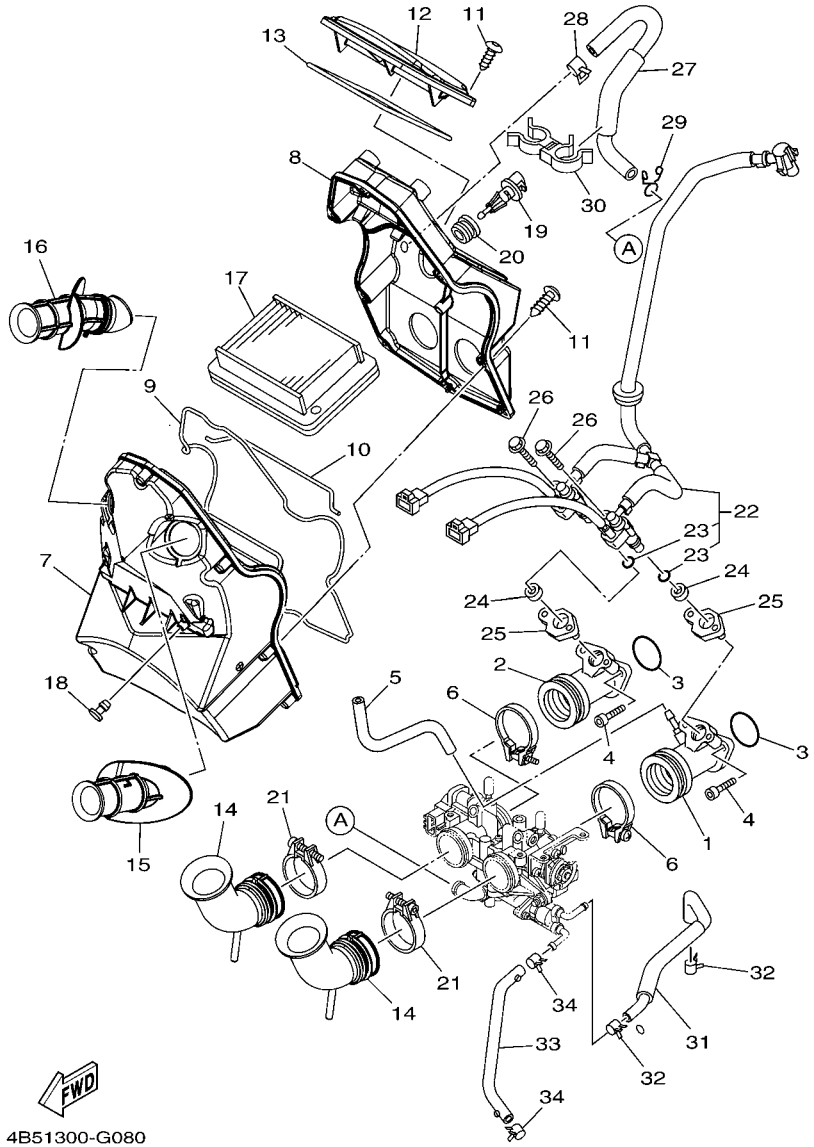

FIG. 8 INTAKE

REF. NO.	PART NO.	DESCRIPTION	4B56					REMARKS
28	90467–17089	CLIP	1					
29	90467–150A2	CLIP	1					
30	90464–20015	CLAMP	1					
31	4B5–1243F–00	HOSE,3	1					
32	90467–10035	CLIP	2					
33	4B5–1244G–00	HOSE, 4	1					
34	90467–10035	CLIP	2					

maxclub.ru

FIG. 9 INTAKE 2

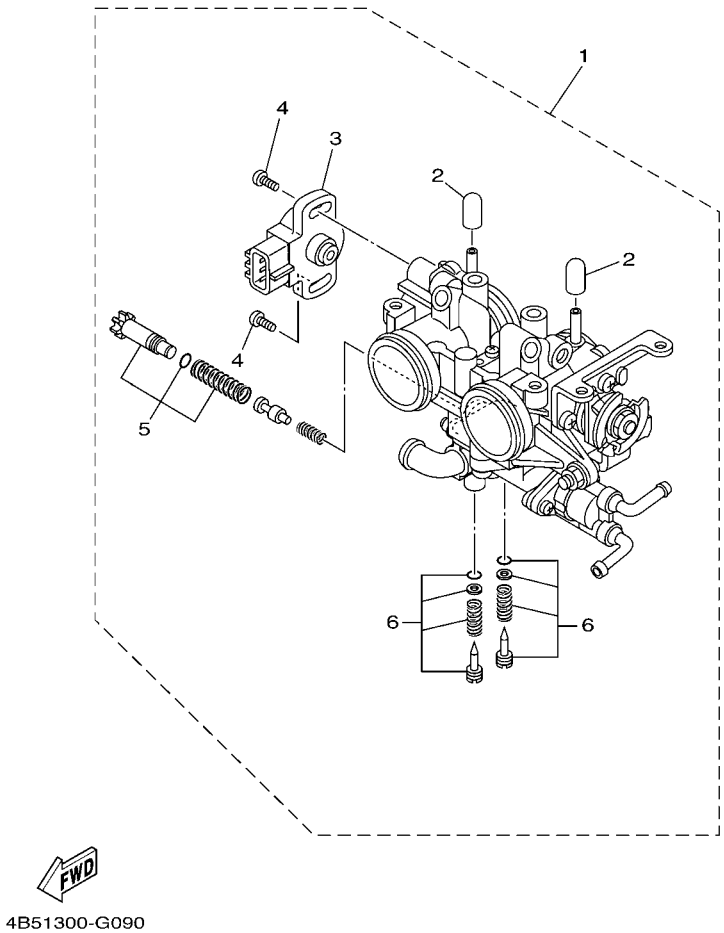

REF. NO.	PART NO.	DESCRIPTION	4B56					REMARKS
1	4B5–13750–00	THROTTLE BODY ASSY	1					
2	84M–14169–00	.CAP	2					
3	8GL–85885–00	.THROTTLE SENSOR ASSY	1					
4	8CC–14216–10	.SCREW	1					
5	5VX–14503–00	.ADJUST SCREW SET	1					
6	5JW–14104–00	.AIR SCREW SET	2					

maxclub.ru

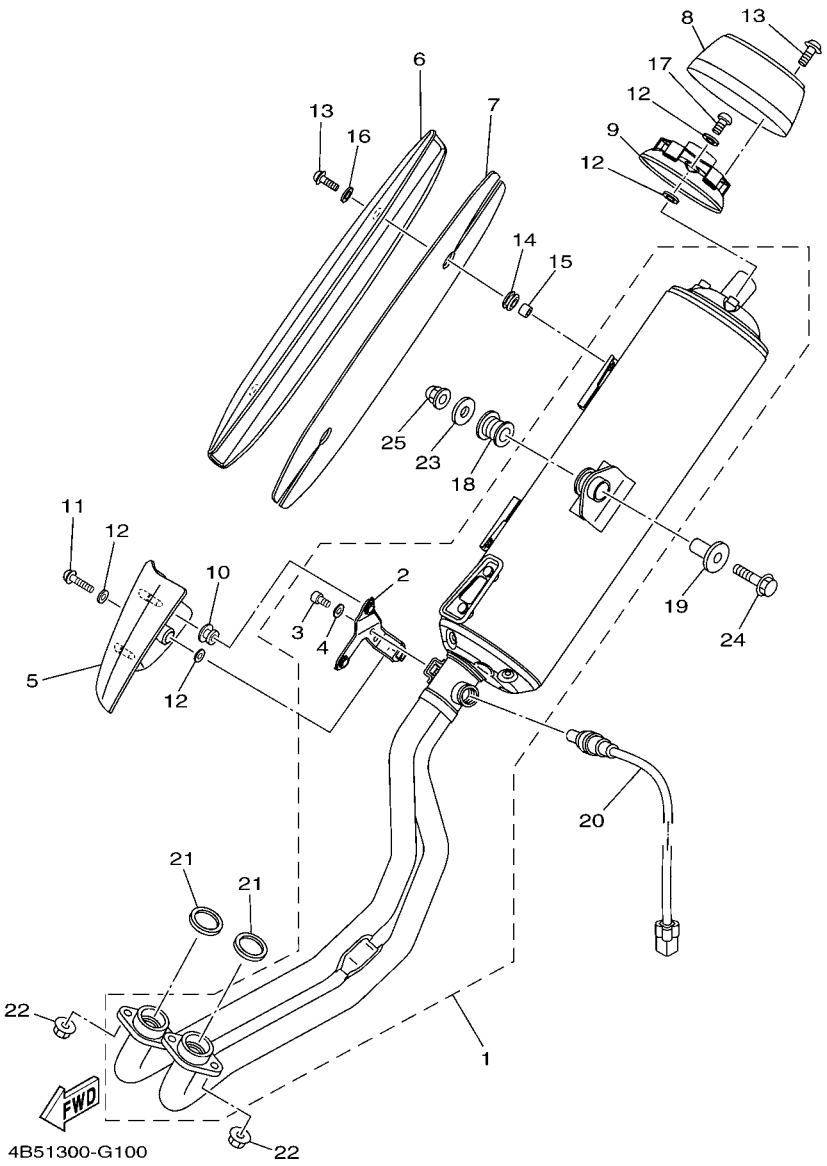

FIG. 10 EXHAUST

REF. NO.	PART NO.	DESCRIPTION	4B56					REMARKS
1	4B5–14711–00	MUFFLER 1	1					
2	4B5–1471M–00	.BRACKET, 1-3	1					
3	91380–06012	.BOLT	2					
4	92990–06200	.WASHER, PLAIN	2					
5	4B5–1465R–00	PLATE, PROTECTOR	1					
6	5VU–1465T–00	PLATE, PROTECTOR	1					
7	5VU–1465U–00	PLATE, PROTECTOR 3	1					
8	5RU–14799–00	CAP	1					
9	4B5–14629–00	STAY, PROTECTOR	1					
10	90480–10332	GROMMET	2					
11	90111–06020	BOLT,HEX. SOCKET BUTTON	1					
12	5GM–14766–00	WASHER, PROTECTOR	8					
13	90111–06015	BOLT,HEX. SOCKET BUTTON	7					
14	90480–12581	GROMMET	2					
15	90387–06023	COLLAR	2					
16	90201–062G3	WASHER, PLATE	2					
17	98980–06010	SCREW, BIND	3					
18	36Y–27424–01	DAMPER, FOOTREST 2	1					
19	90387–10046	COLLAR	1					
20	4B5–8592A–00	SENSOR, OXYGEN	1					
21	4BR–14613–00	GASKET, EXHAUST PIPE	2					
22	95602–08200	NUT, SELF-LOCKING	4					
23	90201–10043	WASHER, PLATE	1					
24	95812–10040	BOLT, FLANGE	1					
25	90176–10075	NUT, CROWN	1					

maxclub.ru

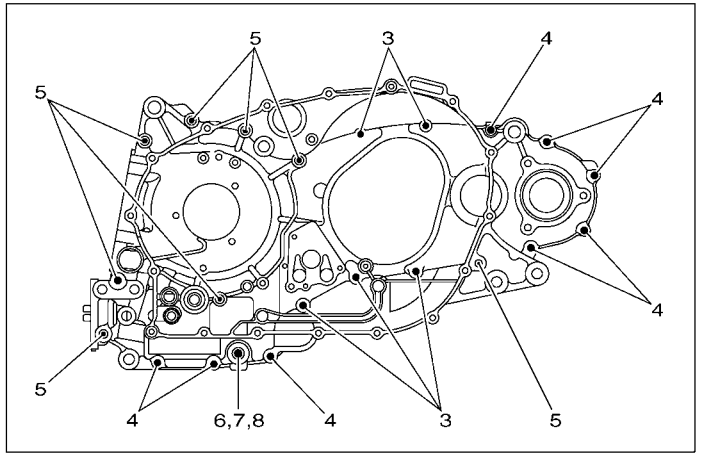

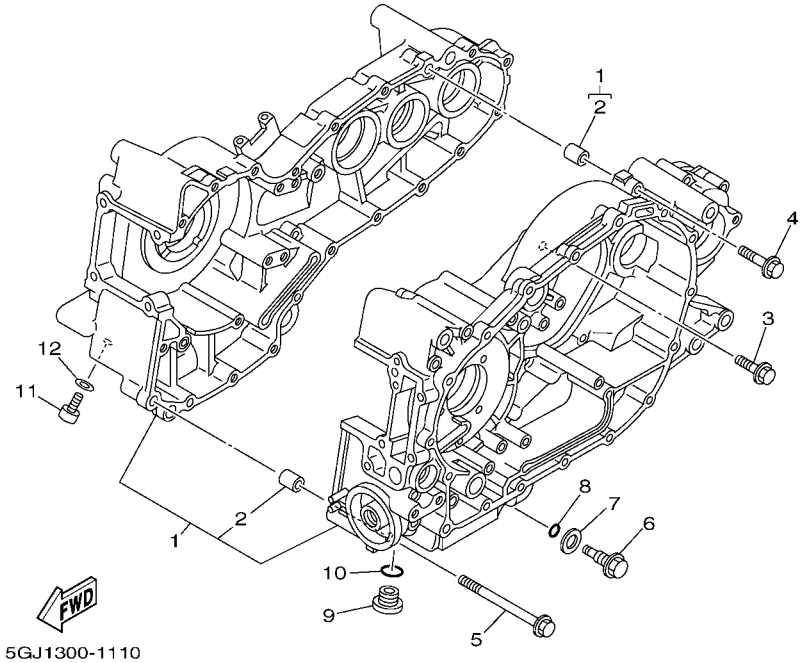

FIG. 11 CRANKCASE

REF. NO.	PART NO.	DESCRIPTION	4B56					REMARKS
1	4B5–15100–00	CRANKCASE ASSY	1					
2	99530–10114	.PIN, DOWEL	2					
3	95022–06035	BOLT, FLANGE	5					
4	95022–06050	BOLT, FLANGE	8					
5	95022–08110	BOLT, FLANGE	8					
6	15B–15481–00	BOLT 1	1					
7	214–11198–01	GASKET	1					
8	93210–48364	O-RING	1					
9	4H7–15189–00	PLUG	1					
10	93210–22382	O-RING	1					
11	90110–08077	BOLT, HEXAGON SOCKET HEAD	1					
12	90430–08119	GASKET	1					

maxclub.ru

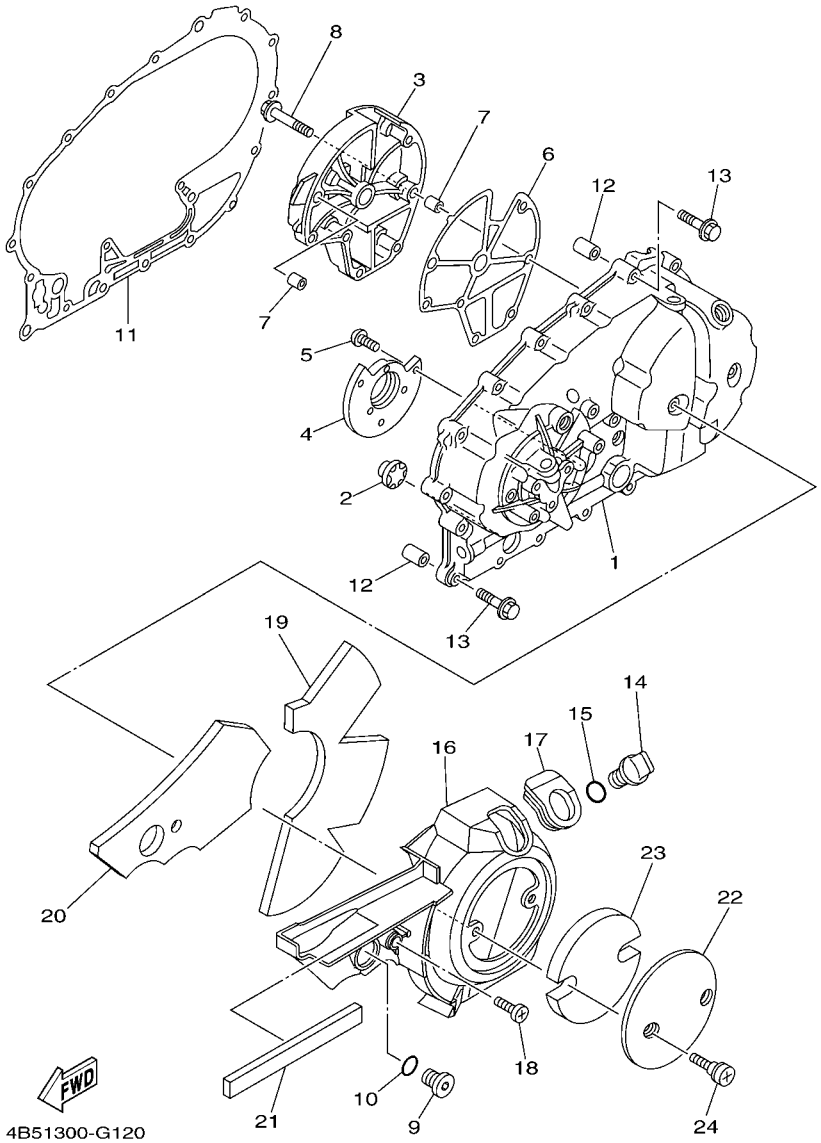

FIG. 12 CRANKCASE COVER 1

REF. NO.	PART NO.	DESCRIPTION	4B56					REMARKS
1	5GJ–15411–02	COVER, CRANKCASE 1	1					
2	2H7–15361–00	GAUGE, LEVEL	1					
3	5GJ–15414–00	COVER, AIR CLEANER	1					
4	5GJ–15417–00	COVER, CAP	1					
5	90149–06082	SCREW	3					
6	5GJ–15453–01	GASKET	1					
7	99530–10114	PIN, DOWEL	2					
8	95022–06035	BOLT, FLANGE	7					
9	36Y–15189–00	PLUG	1					
10	93210–16325	O-RING	1					
11	5GJ–15451–01	GASKET, CRANKCASE COVER 1	1					
12	99530–10114	PIN, DOWEL	2					
13	95022–06035	BOLT, FLANGE	19					
14	5GJ–15363–00	PLUG, OIL	1					
15	93210–19123	O-RING	1					
16	4B5–15415–00	COVER, GENERATOR	1					
17	5GJ–15486–00	GROMMET	1					
18	3KJ–15481–00	BOLT 1	1					
19	4B5–15316–00	DAMPER 1	1					
20	4B5–15335–00	DAMPER 3	1					
21	5GJ–15337–00	DAMPER 4	1					
22	5GJ–15499–10	PROTECTOR, COVER	1					
23	5GJ–15789–00	DAMPER	1					
24	3KJ–15481–00	BOLT 1	2					

.maxclub.ru

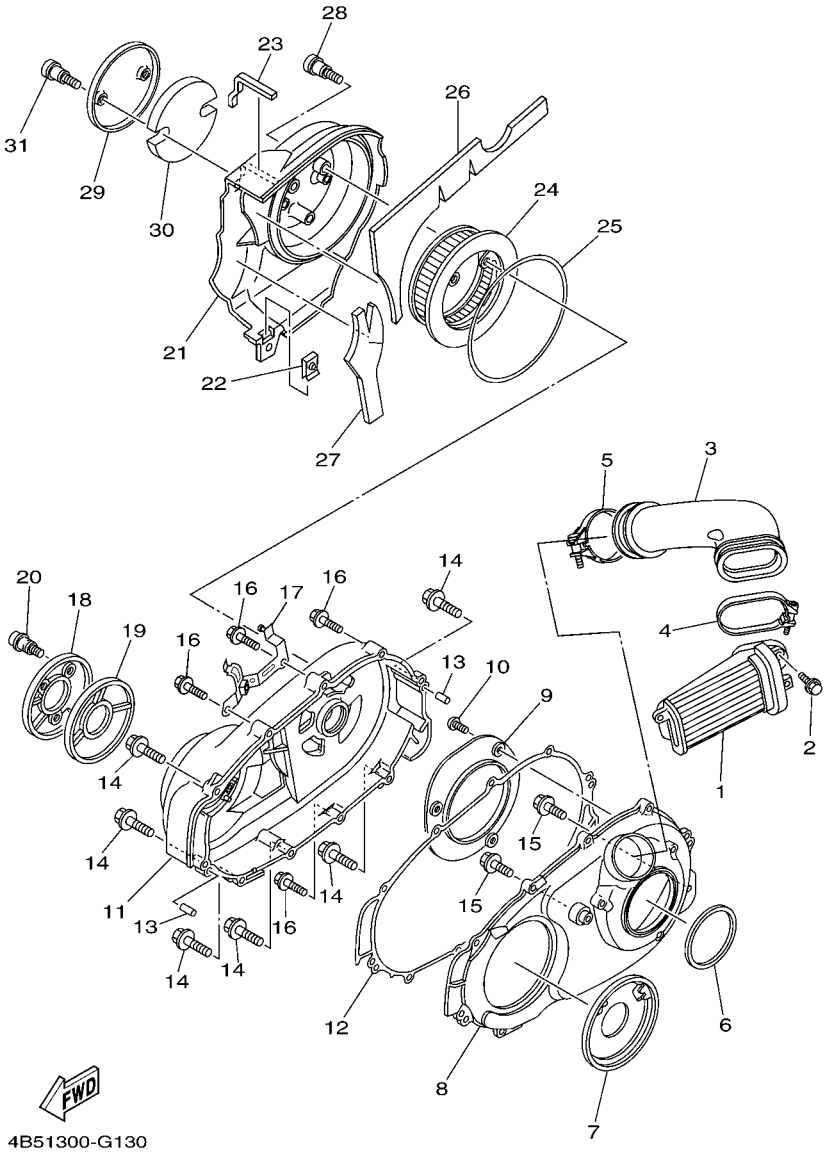

FIG. 13 CRANKCASE COVER 2

REF. NO.	PART NO.	DESCRIPTION	4B56					REMARKS
1	4B5–15407–00	ELEMENT 1	1					
2	95822–06020	BOLT, FLANGE	2					
3	4B5–15473–00	DUCT, AIR	1					
4	90450–01001	HOSE CLAMP ASSY	1					
5	90450–72005	HOSE CLAMP ASSY	1					
6	5GJ–15474–00	SEAL, AIR DUCT	1					
7	15B–15191–00	PLATE	1					
8	5GJ–15431–00	COVER, CRANKCASE 3	1					
9	5GJ–15113–00	PLATE	1					
10	92012–06014	BOLT, BUTTON HEAD	3					
11	5GJ–15421–01	COVER, CRANKCASE 2	1					
12	5GJ–15461–01	GASKET, CRANKCASE COVER 2	1					
13	99480–08020	PIN	2					
14	95022–08040	BOLT, FLANGE	6					
15	95022–08025	BOLT, FLANGE	2					
16	95022–06035	BOLT, FLANGE	4					
17	4B5–26279–00	GUIDE, CABLE	1					
18	4B5–15492–00	COVER	1					
19	5GJ–1542A–00	DAMPER 1	1					
20	3KJ–15481–00	BOLT 1	3					
21	4B5–15423–00	COVER 2	1					
22	90183–05042	NUT, SPRING	1					
23	3CV–28378–00	PAD	1					
24	5GJ–15408–00	ELEMENT 2	1					
25	48U–14452–00	SEAL	1					
26	4B5–15326–00	DAMPER 2	1					
27	5GJ–1542B–00	DAMPER 2	1					

.maxclub.ru

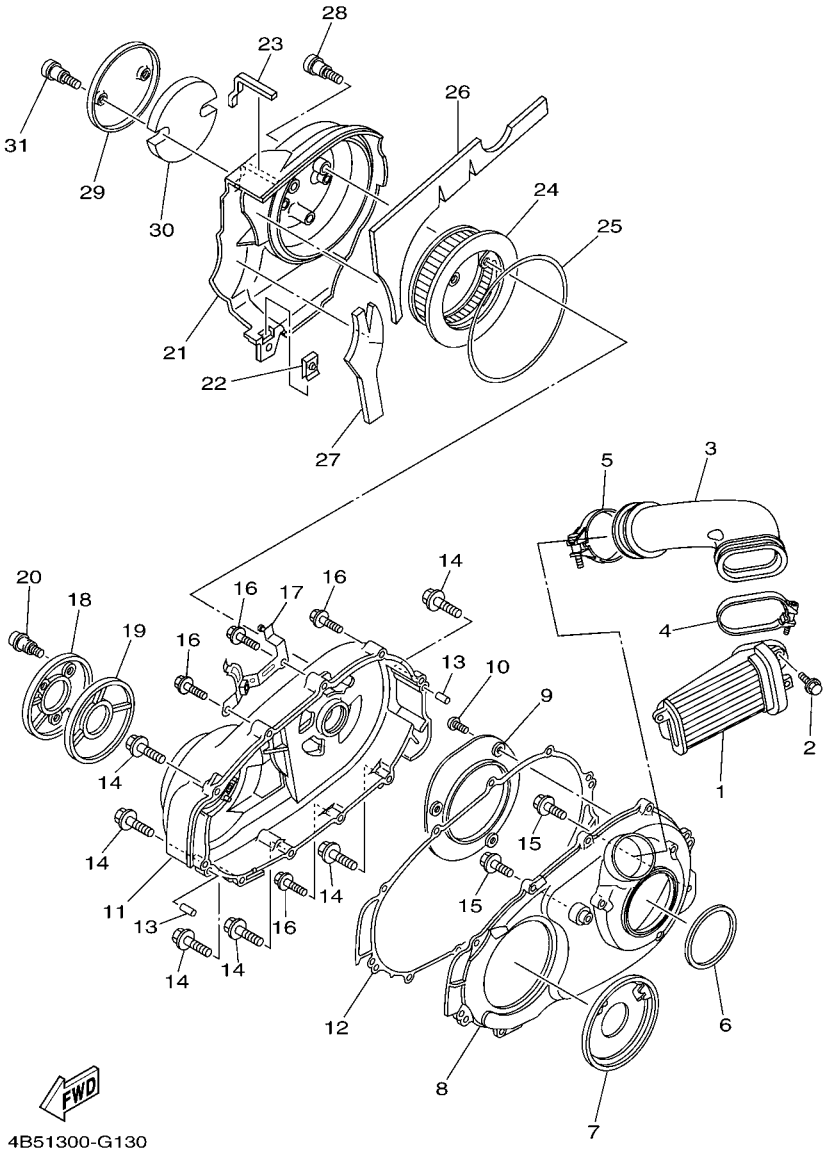

FIG. 13 CRANKCASE COVER 2

REF. NO.	PART NO.	DESCRIPTION	4B56					REMARKS
28	3KJ–15481–00	BOLT 1	3					
29	5GJ–15499–10	PROTECTOR, COVER	1					
30	5GJ–15789–00	DAMPER	1					
31	3KJ–15481–00	BOLT 1	2					

.maxclub.ru

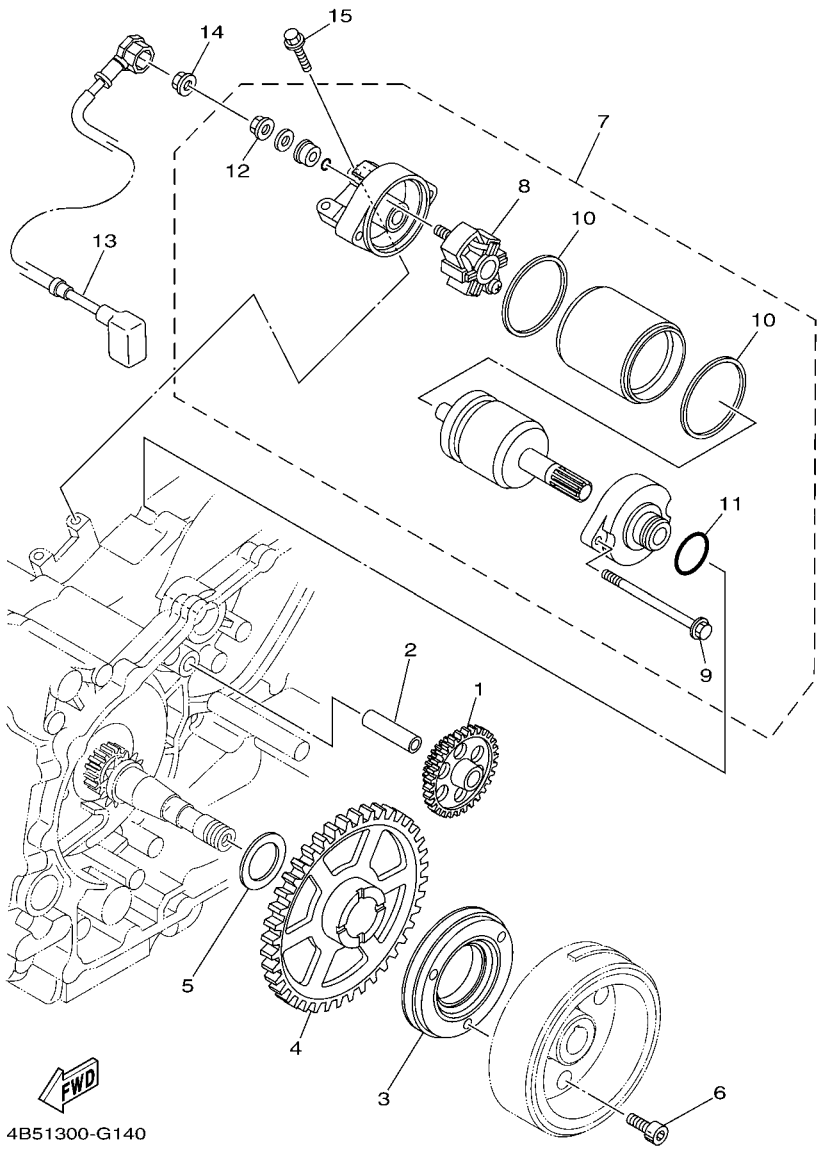

FIG. 14 STARTER

REF. NO.	PART NO.	DESCRIPTION	4B56					REMARKS
1	5GJ–15512–00	GEAR, IDLER 1	1					
2	36Y–15521–01	SHAFT 1	1					
3	4NK–15590–00	STARTER ONE-WAY ASSY	1					
4	5GJ–15517–00	GEAR, IDLER 2	1					
5	90201–25290	WASHER, PLATE	1					
6	90110–08080	BOLT, HEXAGON SOCKET HEAD	3					
7	4B5–81890–00	MOTOR ASSY	1					
8	4B5–81840–00	.BRUSH HOLDER ASSY	1					
9	4B5–81826–00	.BOLT	2					
10	4B5–81844–00	.GASKET	2					
11	1FK–81847–00	.O-RING	1					
12	4XV–8182A–00	.NUT	1					
13	4B5–81815–00	CORD, STARTER MOTOR	1					
14	4XV–8182A–00	NUT	1					
15	95812–06025	BOLT, FLANGE	2					

maxclub.ru

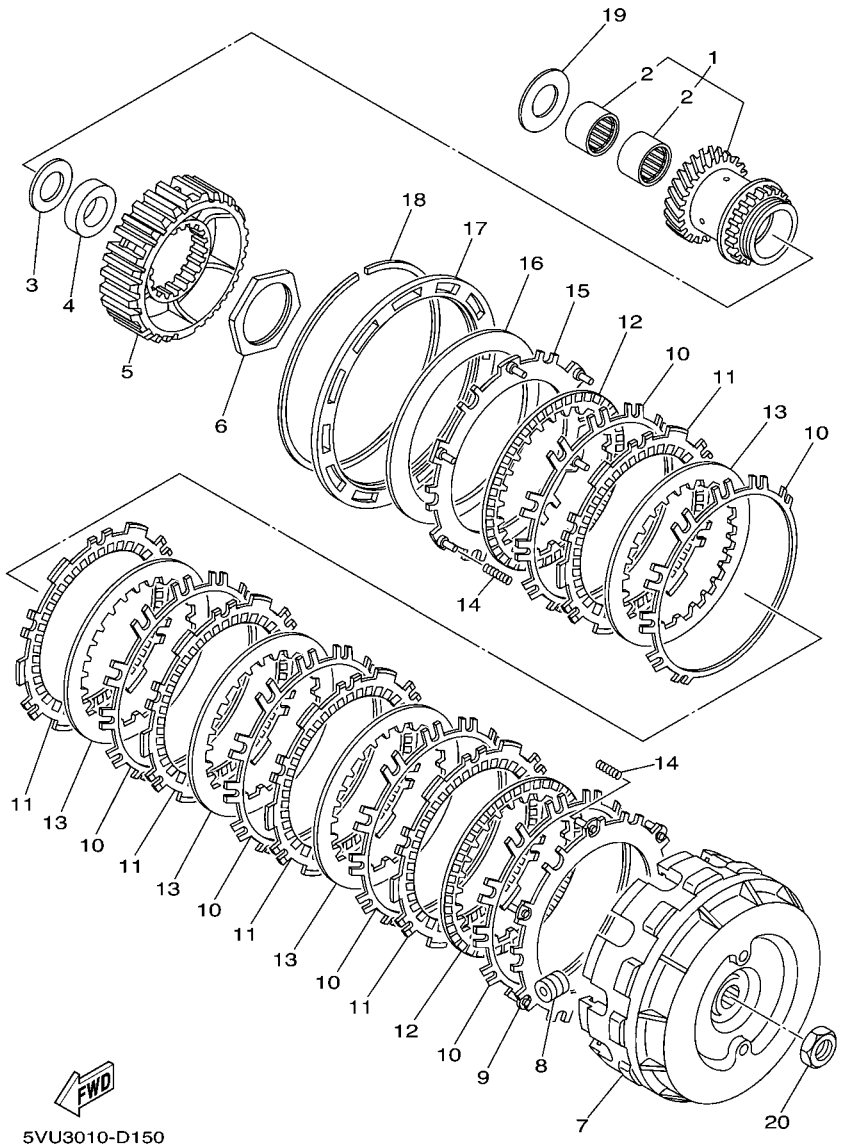

FIG. 15 CLUTCH

REF. NO.	PART NO.	DESCRIPTION	4B56					REMARKS
1	5VU–16110–00	PRIMARY DRIVE GEAR ASSY	1					
2	93317–32493	.BEARING	2					
3	90201–244A9	WASHER, PLATE (2.05T)	1					
4	90387–20018	COLLAR	1					
5	5VU–16371–00	BOSS, CLUTCH	1					
6	90170–48003	NUT	1					
7	5GJ–16510–10	CLUTCH HOUSING COMP.	1					
8	5GJ–16540–00	ROLLER WEIGHT ASSY	12					
9	5GJ–16520–00	PLATE, THRUST WEIGHT	1					
10	5GJ–16533–00	SPRING, CLUTCH	6					
11	5GJ–16321–10	PLATE, FRICTION	5					
12	5GJ–16325–10	PLATE, CLUTCH 2	2					
13	5GJ–16324–00	PLATE, CLUTCH 1	4					
14	4B5–16539–00	SPRING	6					
15	5GJ–16550–00	PRESSURE PLATE ASSY	1					
16	5GJ–16334–00	SPRING, CLUTCH 2	1					
17	5GJ–16537–00	PLATE, SPRING STOPPER	1					UR
	5GJ–16537–10	PLATE, SPRING STOPPER	1					UR
	5GJ–16537–20	PLATE, SPRING STOPPER	1					UR
	5GJ–16537–30	PLATE, SPRING STOPPER	1					UR
18	5GJ–16529–00	CLIP	1					
19	90201–24017	WASHER, PLATE	1					
20	90170–16326	NUT	1					

.maxclub.ru

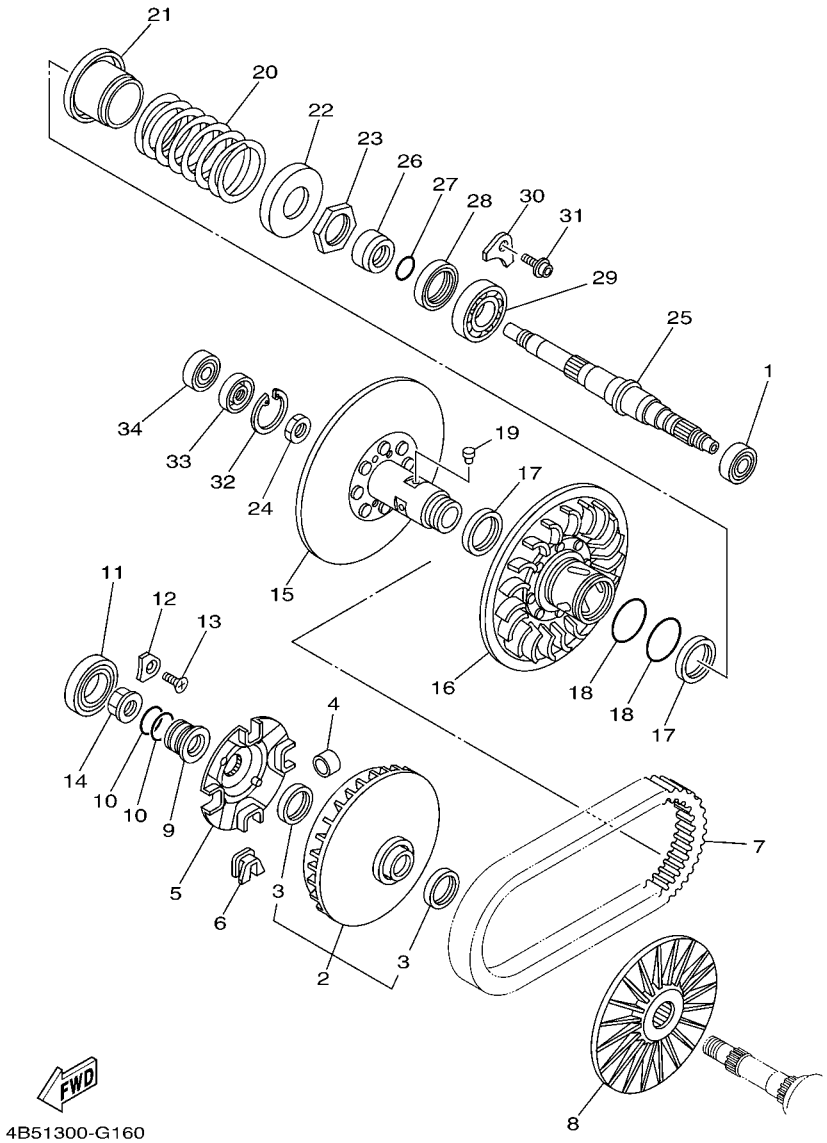

FIG. 16 CLUTCH 2

REF. NO.	PART NO.	DESCRIPTION	4B56					REMARKS
1	93306–30102	BEARING	1					
2	4B5–W1760–00	PRIMARY SLIDING SHEAVE ASSY.	1					
3	93101–35001	.OIL SEAL	2					
4	5VU–17632–00	WEIGHT	8					
5	5VU–17623–00	CAM	1					
6	5VU–17653–00	SLIDER	4					
7	5VU–17641–00	V-BELT	1					
8	4B5–17611–00	SHEAVE, PRIMARY FIXED	1					
9	5GJ–17649–00	SPACER	1					
10	93210–30611	O-RING	2					
11	93306–00713	BEARING	1					
12	4XM–15383–00	PLATE, BEARING COVER	1					
13	90151–06024	SCREW, COUNTERSUNK	1					
14	90179–20013	NUT	1					
15	5VU–17660–00	SECONDARY FIXED SHEAVE COMP.	1					
16	5GJ–17670–01	SECONDARY SLIDING SHEAVE	1					
17	93104–41119	OIL SEAL	2					
18	93210–44545	O-RING	2					
19	4CW–17664–00	PIN, GUIDE	4					
20	90501–600A0	SPRING, COMPRESSION	1					
21	5GJ–17690–00	SPRING SEAT COMP.	1					
22	4WV–17644–00	SEAT,SPRING	1					
23	90170–36279	NUT	1					
24	90170–18221	NUT	1					
25	5VU–17681–00	SHAFT, SECONDARY	1					
26	90387–26001	COLLAR	1					
27	93210–26001	O-RING	1					

maxclub.ru

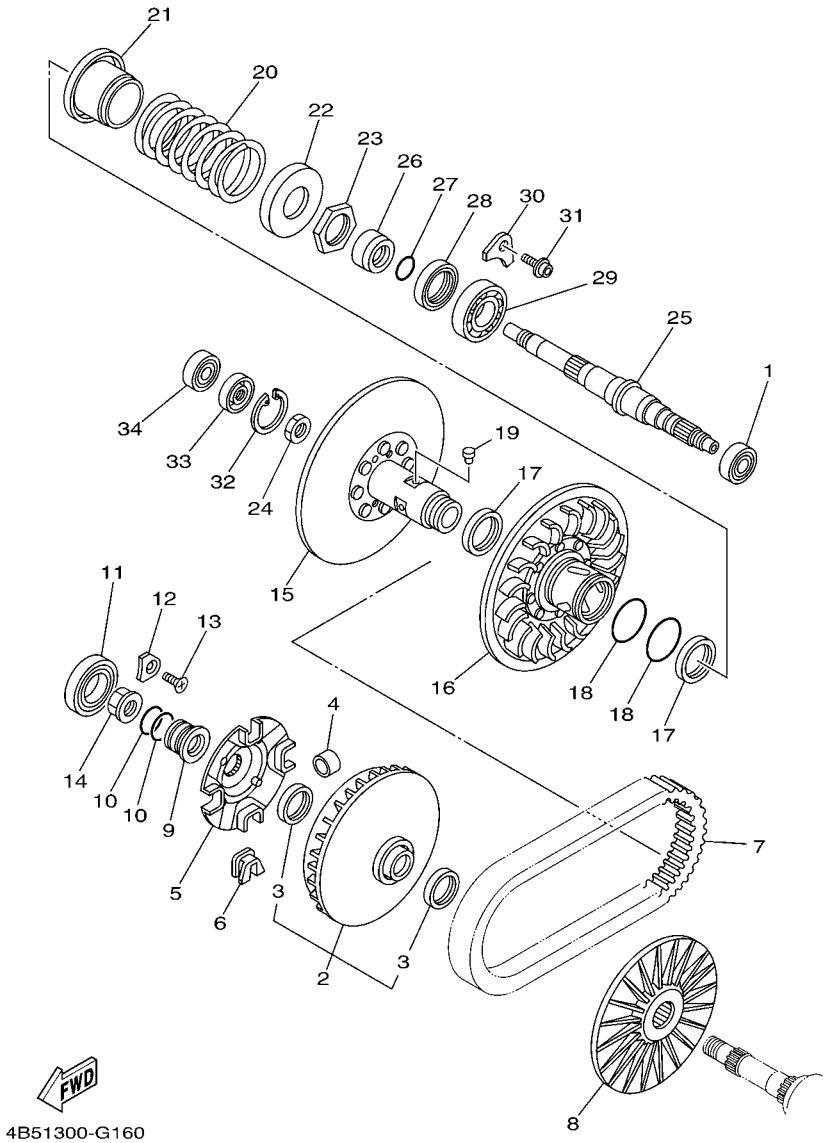

FIG. 16 CLUTCH 2

REF. NO.	PART NO.	DESCRIPTION	4B56					REMARKS
28	93102–42004	OIL SEAL	1					
29	93306–20651	BEARING	1					
30	5GJ–15383–00	PLATE, BEARING COVER	2					
31	90110–06036	BOLT, HEXAGON SOCKET HEAD	2					
32	99009–42500	CIRCLIP	1					
33	93102–15004	OIL SEAL	1					
34	93306–30217	BEARING	1					

maxclub.ru

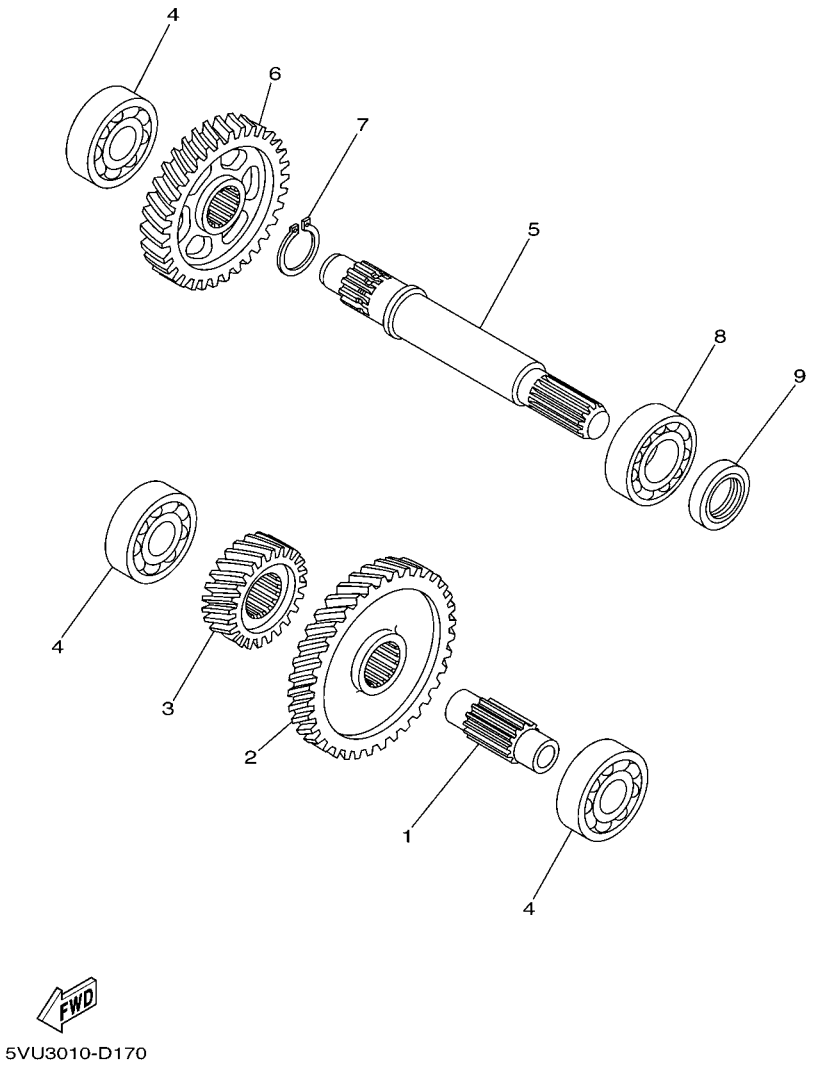

FIG. 17 TRANSMISSION

REF. NO.	PART NO.	DESCRIPTION	4B56					REMARKS
1	5VU–17411–00	AXLE, MAIN	1					
2	5VU–16151–00	GEAR, PRIMARY DRIVEN (52T)	1					
3	5VU–17111–00	GEAR,1ST PINION (22T)	1					
4	93306–30427	BEARING	3					
5	5GJ–17421–00	AXLE, DRIVE	1					
6	5GJ–17211–00	GEAR, 1ST WHEEL (36T)	1					
7	99009–25400	CIRCLIP	1					
8	93306–205A8	BEARING	1					
9	93102–25064	OIL SEAL	1					

maxclub.ru

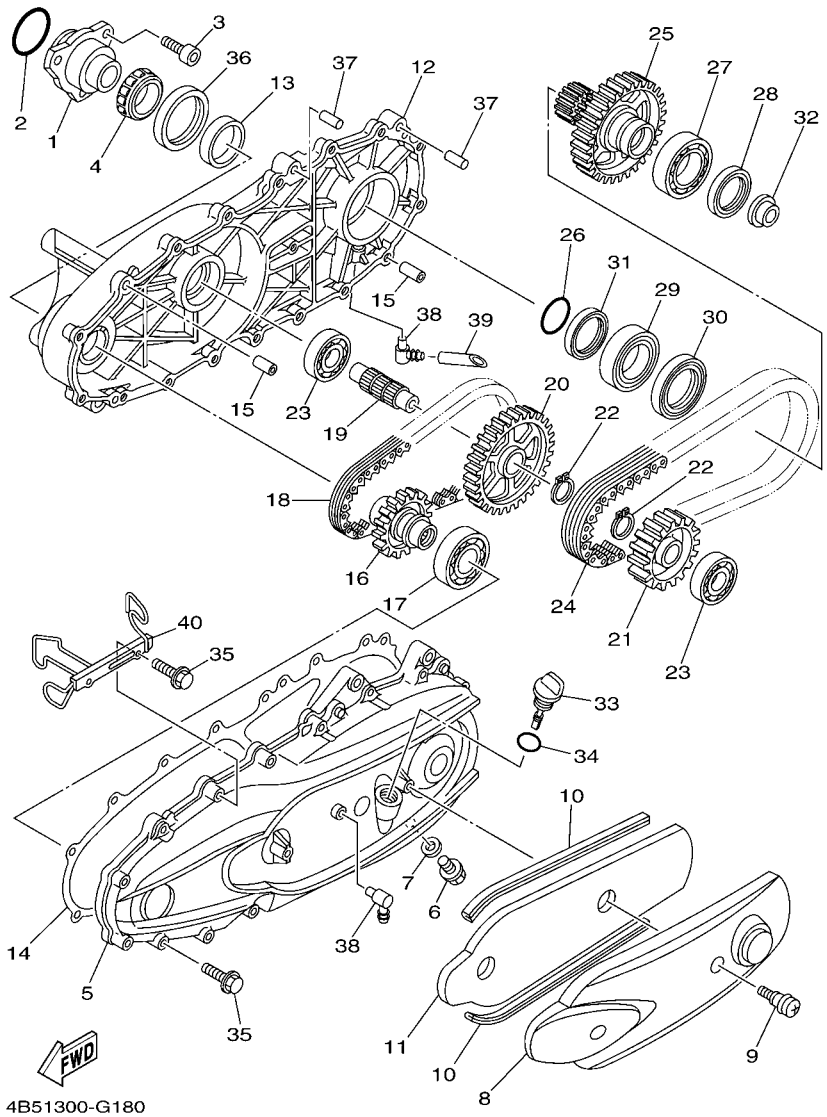

FIG. 18 SUB TRANSMISSION

REF. NO.	PART NO.	DESCRIPTION	4B56					REMARKS
1	15B–17524–00	HOLDER	1					
2	93210–50553	O-RING	1					
3	91312–08020	BOLT	3					
4	93332–00086	BEARING	1					
5	5GJ–17541–10	CASE, TRANSFER 1	1					
6	90340–12006	PLUG, STRAIGHT SCREW	1					
7	812–11198–00	GASKET	1					
8	5GJ–15418–00	COVER, CHAIN CASE	1					
9	3KJ–15481–00	BOLT 1	2					
10	5GJ–15335–00	DAMPER 3	2					
11	5VU–15338–00	DAMPER 5	1					
12	5GJ–17542–10	CASE, TRANSFER 2	1					
13	5GJ–17554–00	RETAINER, BEARING	1					
14	5GJ–17818–02	GASKET	1					
15	99530–10114	PIN, DOWEL	2					
16	5GJ–17451–00	SPROCKET, DRIVE (25T)	1					
17	93306–20637	BEARING	1					
18	5GJ–16139–00	CHAIN, PRIMARY	1					
19	5GJ–17523–00	SHAFT	1					
20	5GJ–17452–00	SPROCKET, DRIVE (41T)	1					
21	5GJ–17459–00	SPROCKET, DRIVE (29T)	1					
22	99009–25400	CIRCLIP	2					
23	93306–30427	BEARING	2					
24	5GJ–11456–00	CHAIN, PRIMARY	1					
25	5GJ–17469–00	SPROCKET, DRIVE (40T)	1					
26	93210–34504	O-RING	1					
27	93306–00807	BEARING	1					

maxclub.ru

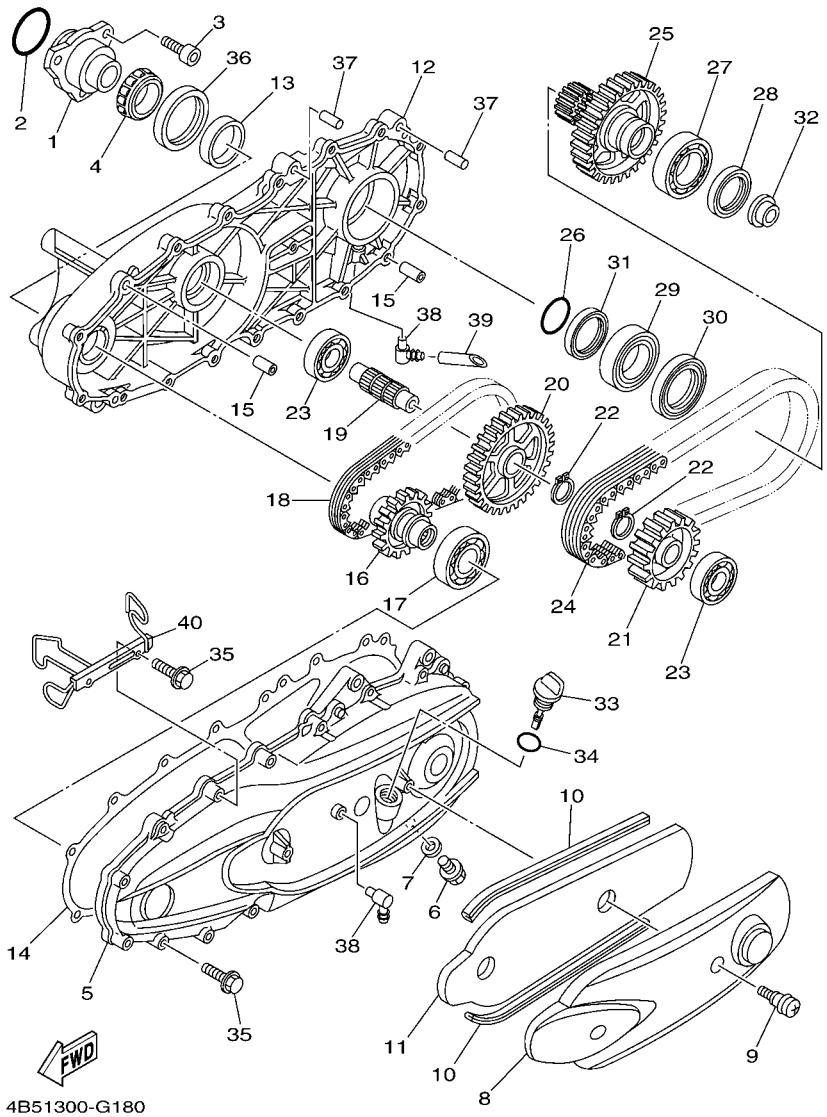

FIG. 18 SUB TRANSMISSION

REF. NO.	PART NO.	DESCRIPTION	4B56					REMARKS
28	93102–40021	OIL SEAL	1					
29	93306–00808	BEARING	1					
30	93102–48004	OIL SEAL	1					
31	93105–45017	OIL SEAL	1					
32	15B–46153–00	COLLAR, GUIDE	1					
33	5GJ–15362–01	PLUG, OIL LEVEL	1					
34	93210–19123	O-RING	1					
35	95022–06035	BOLT, FLANGE	18					
36	93102–55004	OIL SEAL	1					
37	93608–30002	PIN, DOWEL	2					
38	3ES–15371–00	BREATHER	2					
39	5GJ–1531A–00	HOSE, BREATHER 1	1					
40	4B5–2587A–00	HOLDER, BRAKE HOSE	1					

maxclub.ru

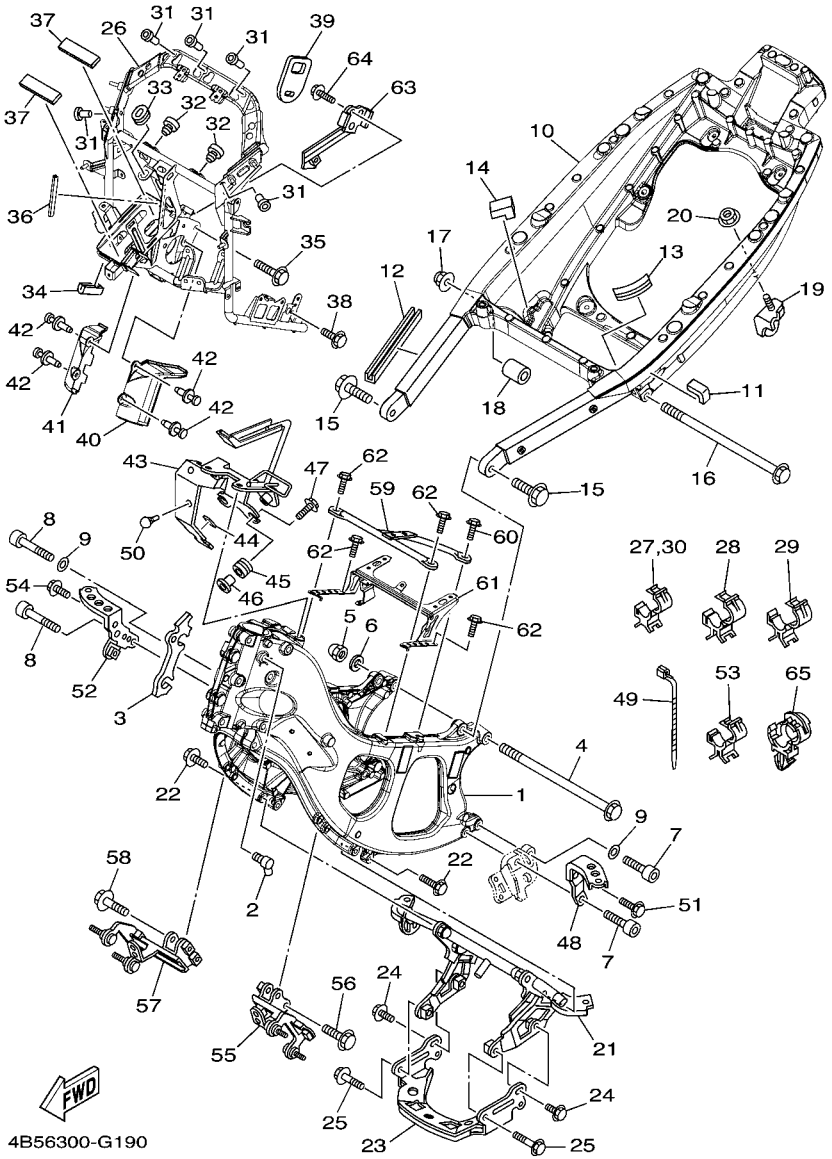

FIG. 19 FRAME

REF. NO.	PART NO.	DESCRIPTION	4B56					REMARKS
1	4B5–21110–00	FRAME COMP.	1					
2	5VX–21279–10	PLUG, BLIND	1					
3	4B5–2113B–00	DAMPER	1					
4	90105–12787	BOLT, FLANGE	1					
5	90176–12002	NUT, CROWN	1					
6	90201–12043	WASHER, PLATE	1					
7	90110–10021	BOLT, HEXAGON SOCKET HEAD	2					
8	90110–10022	BOLT, HEXAGON SOCKET HEAD	2					
9	90201–10037	WASHER, PLATE	2					
10	4B5–21190–00	REAR FRAME COMP.	1					
11	4D9–2174X–00	DAMPER	1					
12	4B5–2171H–00	GUIDE	1					
13	31A–24188–01	MOLD, FUEL TANK	1					
14	4B5–2112C–00	DAMPER 2	1					
15	90105–12058	BOLT, FLANGE	2					
16	90105–12052	BOLT, FLANGE	1					
17	95602–12200	NUT, SELF-LOCKING	1					
18	4B5–21116–00	COLLAR	1					
19	4B5–21445–00	STAY, MUFFLER 1	1					
20	95602–10200	NUT, U FLANGE	1					
21	4B5–2142K–00	BRACKET, RADIATOR	1					
22	95812–08030	BOLT, FLANGE	4					
23	4B5–2117G–00	PROTECTOR	1					
24	95802–06010	BOLT, FLANGE	2					
25	95802–06025	BOLT, FLANGE	2					
26	4B5–28356–10	STAY 1	1					
27	90464–10190	CLAMP	1					

.iaxclub.ru

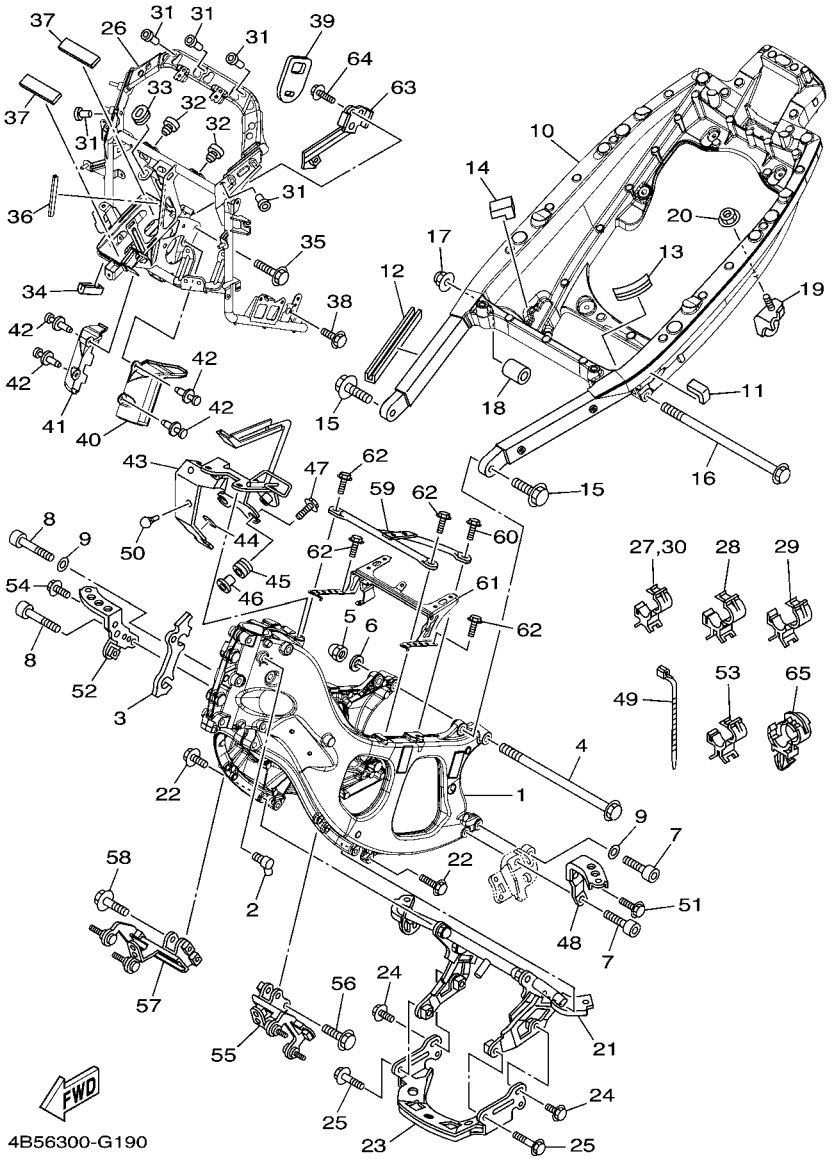

FIG. 19 FRAME

REF. NO.	PART NO.	DESCRIPTION	4B56					REMARKS
28	90464–25217	CLAMP	2					
29	90464–30252	CLAMP	5					
30	90464–10190	CLAMP	1					
31	90179–05523	NUT	5					
32	22W–24741–00	PAD, SEAT	2					
33	90480–01558	GROMMET	1					
34	3VD–24188–00	MOLD, FUEL TANK	1					
35	95822–10045	BOLT, FLANGE	2					
36	4BP–24188–00	MOLD, FUEL TANK	1					
37	4B5–2317J–00	DAMPER 1	2					
38	95822–08020	BOLT, FLANGE	2					
39	4B5–2139W–00	COVER	1					
40	4B5–2117F–00	COVER	1					
41	4B5–2117M–00	COVER 2	1					
42	90269–07077	RIVET	4					
43	4B5–21147–11	BRACKET, AIR CLEANER 1	1					
44	4B5–2112J–00	DAMPER 4	1					
45	90480–13003	GROMMET	2					
46	90560–06201	SPACER	2					
47	95822–06016	BOLT, FLANGE	2					
48	4B5–2141A–00	BRACKET 1	1					
49	90464–13077	CLAMP	1					
50	90338–05009	PLUG	1					
51	95822–08016	BOLT, FLANGE	1					
52	4B5–2141E–00	BRACKET 2	1					
53	90464–20191	CLAMP	1					
54	95822–08016	BOLT, FLANGE	1					

maxclub.ru

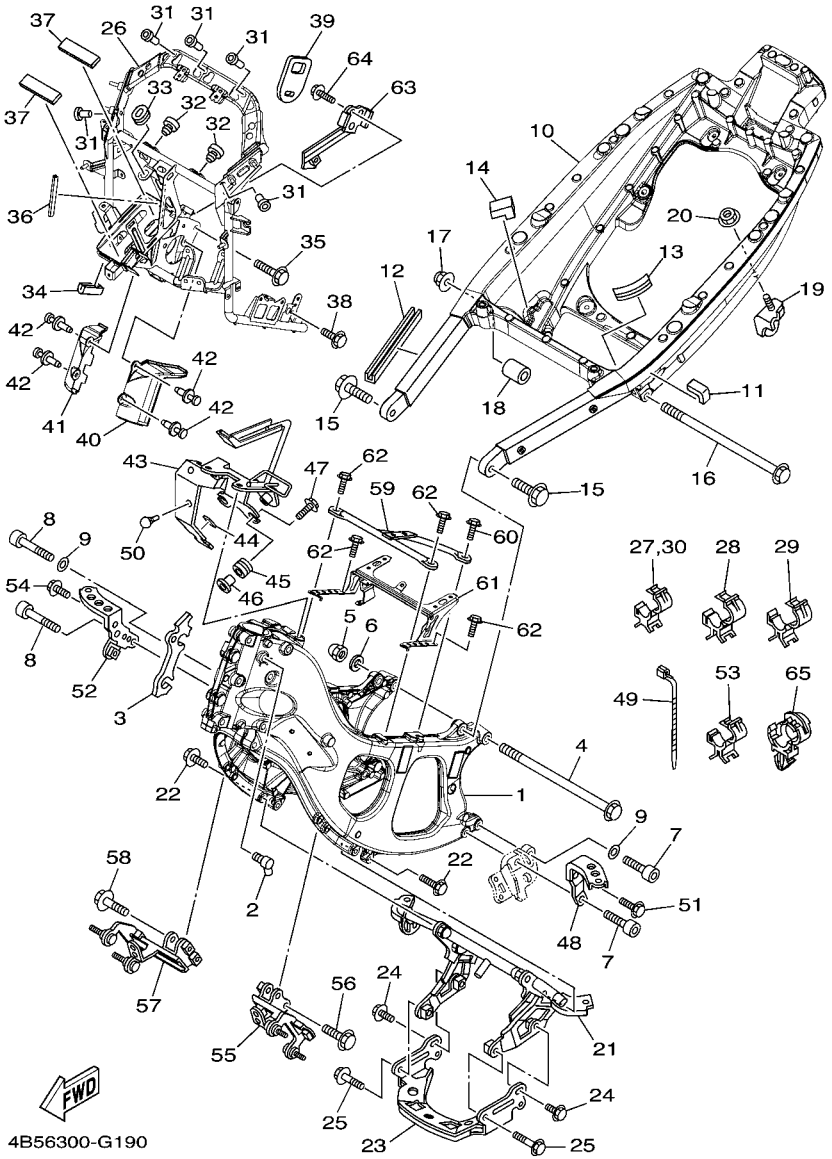

FIG. 19 FRAME

REF. NO.	PART NO.	DESCRIPTION	4B56					REMARKS
55	4B5–2144H–00	BRACKET, FOOTREST 3	1					
56	95812–08030	BOLT, FLANGE	2					
57	4B5–2145H–00	BRACKET, FOOTREST 4	1					
58	95812–08030	BOLT, FLANGE	2					
59	4B5–2119A–00	PIPE, CROSS 6	1					
60	90119–06186	BOLT, WITH WASHER	1					
61	4B5–21345–00	BRACKET, TANK FITTING	1					
62	90119–06186	BOLT, WITH WASHER	4					
63	4B5–2117A–00	STAY	1					
64	95822–06012	BOLT, FLANGE	2					
65	90464–32002	CLAMP	1					

maxclub.ru

FIG. 20 FENDER

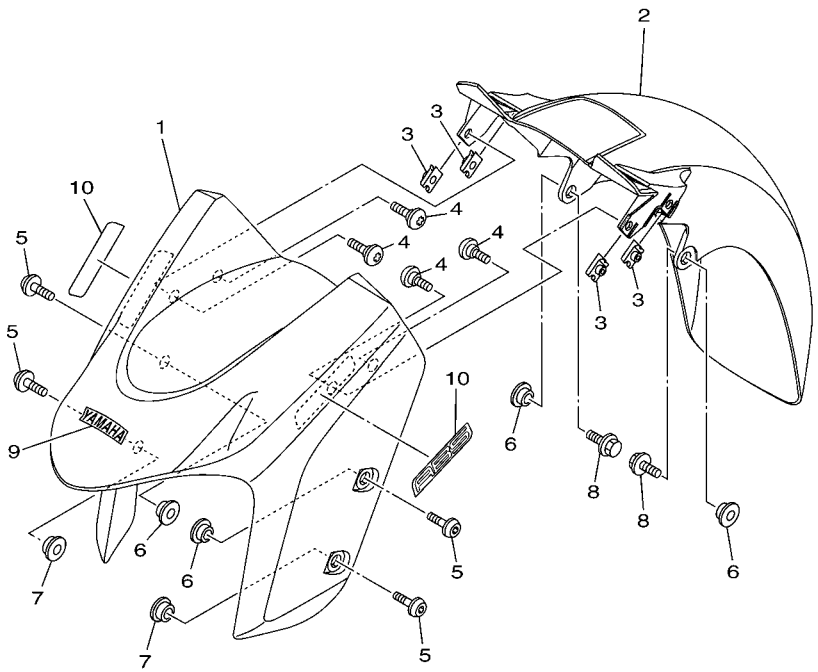

4B56300-G200

REF. NO.	PART NO.	DESCRIPTION	4B56					REMARKS
1	4B5–21511–00–P0	FENDER, FRONT	1					UR FOR MNM1
	4B5–21511–00–P1	FENDER, FRONT	1					UR FOR DPBMX
	4B5–21511–00–P2	FENDER, FRONT	1					UR FOR S3
	4B5–21511–00–P3	FENDER, FRONT	1					UR FOR SMX
2	4B5–21556–00	FENDER, FRONT 2	1					
3	90183–060A6	NUT, SPRING	4					
4	90149–06117	SCREW	4					
5	90111–06097	BOLT,HEX. SOCKET BUTTON	4					
6	90387–06153	COLLAR	4					
7	90387–08079	COLLAR	2					
8	95802–06016	BOLT, FLANGE	2					
9	4B5–2153E–00	EMBLEM, YAMAHA	1					UR FOR MNM1
	3WF–2153E–70	EMBLEM, YAMAHA	1					UR FOR DPBMX,SMX
	3WF–2153E–40	EMBLEM, YAMAHA	1					UR FOR S3
10	5VU–21578–20	EMBLEM	2					FOR MNM1
	5VU–21578–00	EMBLEM	2					EXCEPT FOR MNM1

maxclub.ru

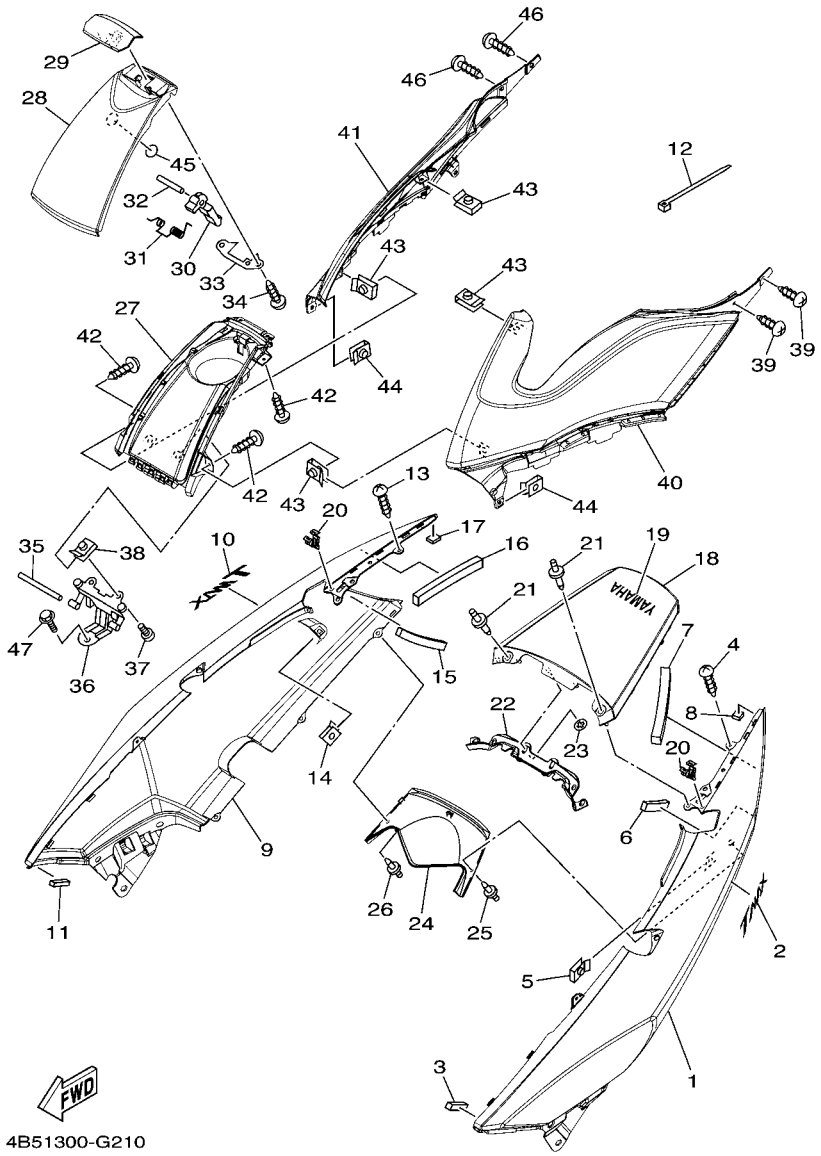

FIG. 21 SIDE COVER

REF. NO.	PART NO.	DESCRIPTION	4B56					REMARKS
1	4B5–21711–00–P0	COVER, SIDE 1	1					UR FOR MNM1
	4B5–21711–00–P1	COVER, SIDE 1	1					UR FOR DPBMX
	4B5–21711–00–P2	COVER, SIDE 1	1					UR FOR S3
	4B5–21711–00–P3	COVER, SIDE 1	1					UR FOR SMX
2	5GJ–2173B–20	EMBLEM 3D	1					
3	4B5–21717–00	DAMPER	1					
4	97702–50016	SCREW, TAPPING	2					
5	90183–05042	NUT, SPRING	1					
6	4B5–2174X–00	DAMPER	1					
7	4B5–2174Y–00	DAMPER	1					
8	4B5–21747–00	DAMPER	1					
9	4B5–21721–00–P0	COVER, SIDE 2	1					UR FOR MNM1
	4B5–21721–00–P1	COVER, SIDE 2	1					UR FOR DPBMX
	4B5–21721–00–P2	COVER, SIDE 2	1					UR FOR S3
	4B5–21721–00–P3	COVER, SIDE 2	1					UR FOR SMX
10	5GJ–2173B–20	EMBLEM 3D	1					
11	4B5–21717–00	DAMPER	1					
12	5Y9–12491–00	CLAMP 1	1					
13	97702–50016	SCREW, TAPPING	2					
14	90183–05042	NUT, SPRING	1					
15	4B5–2174X–00	DAMPER	1					
16	4B5–2174Y–00	DAMPER	1					
17	4B5–21747–00	DAMPER	1					
18	4B5–2171A–00–P0	COVER, TOP	1					UR FOR MNM1
	4B5–2171A–00–P1	COVER, TOP	1					UR FOR DPBMX
	4B5–2171A–00–P2	COVER, TOP	1					UR FOR S3
	4B5–2171A–00–P3	COVER, TOP	1					UR FOR SMX

maxclub.ru

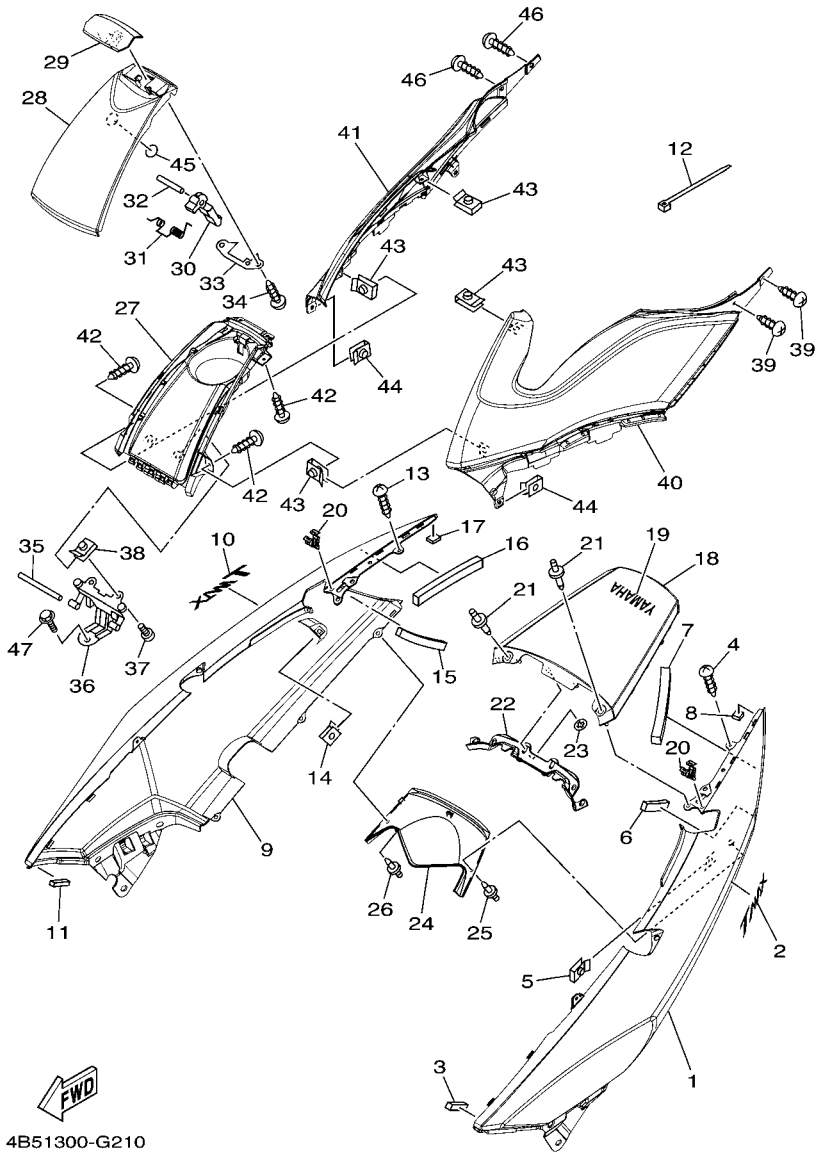

FIG. 21 SIDE COVER

REF. NO.	PART NO.	DESCRIPTION	4B56					REMARKS
19	99246–00080	EMBLEM, YAMAHA	1					UR FOR MNM1
	99247–00080	EMBLEM, YAMAHA	1					UR FOR DPBMX,SMX
	99244–00080	EMBLEM, YAMAHA	1					UR FOR S3
20	90468–040A0	CLIP	2					
21	90269–06008	RIVET	2					
22	4B5–2175N–00	COVER, FLANGE	1					
23	90183–05M02	NUT, SPRING	6					
24	4B5–2177B–00	LID, COVER	1					
25	90269–06001	RIVET	1					
26	90269–06001	RIVET	1					
27	4B5–2473F–00	COVER, SEAT COMP.	1					
28	4B5–2473T–00	LID 1	1					
29	4B5–2477F–00	LEVER, SEAT	1					
30	5GJ–24754–00	HOOK, SEAT	1					
31	4HC–24758–00	SPRING	1					
32	93603–50195	PIN, DOWEL	1					
33	4B5–24217–00	COVER	1					
34	97702–40010	SCREW, TAPPING	2					
35	5GJ–24774–00	PIN	1					
36	4B5–24762–00	REINFORCEMENT	1					
37	98902–05010	SCREW, BIND	2					
38	90183–050A7	NUT, SPRING	2					
39	97702–50016	SCREW, TAPPING	2					
40	4B5–24129–00	COVER, SIDE 1	1					
41	4B5–24139–00	COVER, SIDE 2	1					
42	97702–40010	SCREW, TAPPING	4					
43	90183–040A0	NUT, SPRING	4					

.maxclub.ru

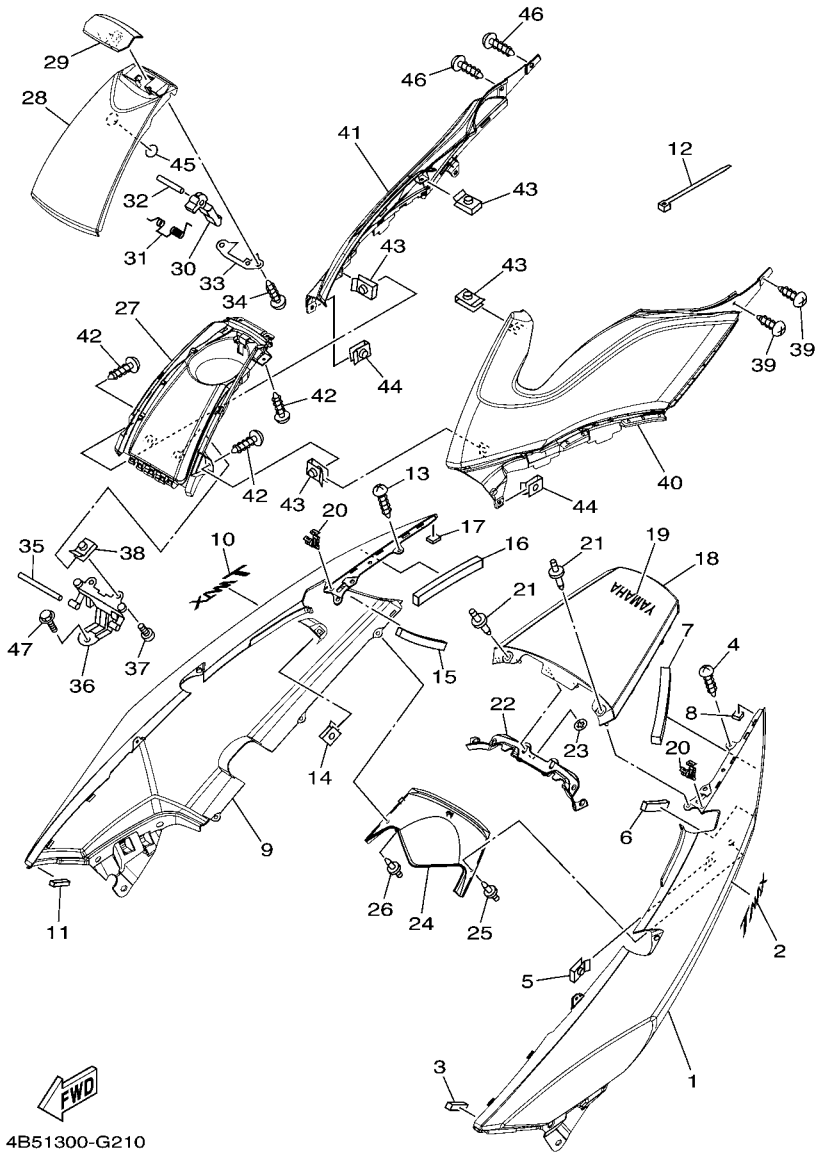

FIG. 21 SIDE COVER

REF. NO.	PART NO.	DESCRIPTION	4B56					REMARKS
44	90183–05042	NUT, SPRING	2					
45	3ME–2415E–01	LABEL, CAUTION	1					
46	97702–50016	SCREW, TAPPING	6					
47	95802–06010	BOLT, FLANGE	1					

maxclub.ru

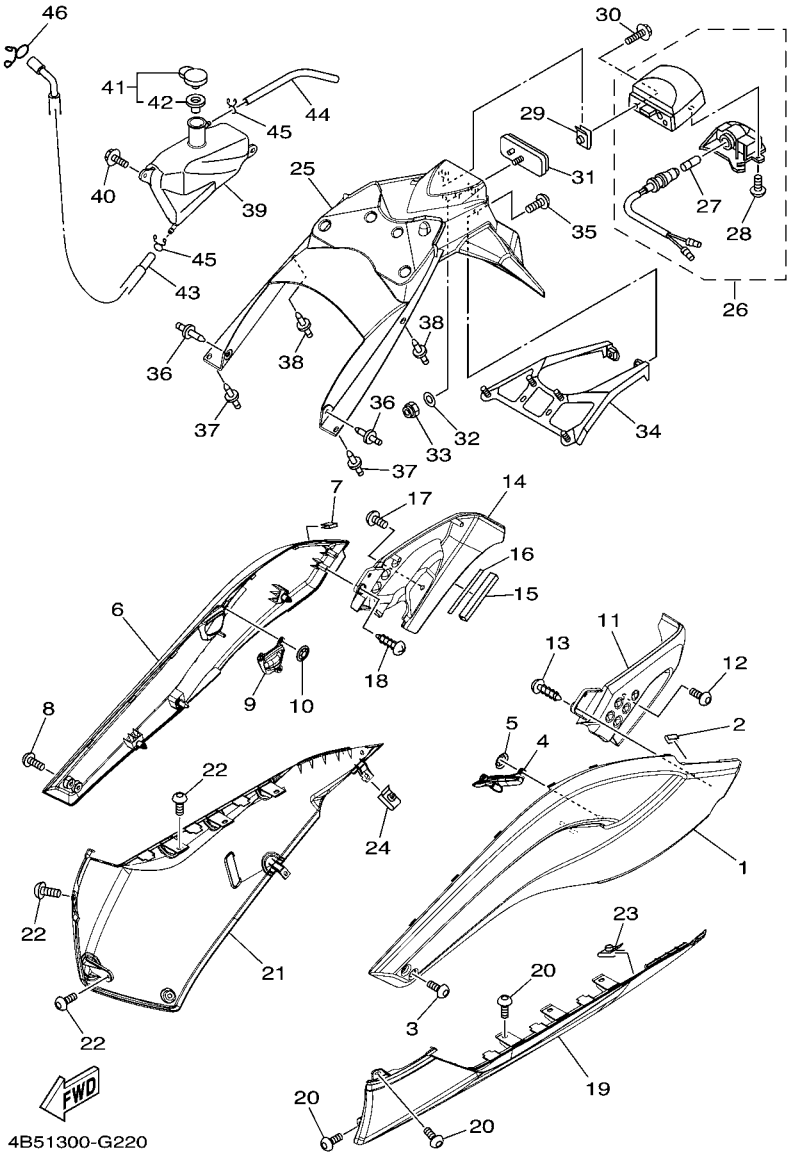

FIG. 22 SIDE COVER 2

REF. NO.	PART NO.	DESCRIPTION	4B56					REMARKS
1	4B5–21731–00–P0	COVER, SIDE 3	1					MBNM1(MNM1,DPBMX)
	4B5–21731–00–P1	COVER, SIDE 3	1					MNM1(S3,SMX)
2	4B5–21732–00	SEAL 1	1					
3	92014–06014	BOLT, BUTTON HEAD	2					
4	4B5–27475–00	CAP 1	1					
5	90183–05M02	NUT, SPRING	3					
6	4B5–21741–00–P0	COVER, SIDE 4	1					MBNM1(MNM1,DPBMX)
	4B5–21741–00–P1	COVER, SIDE 4	1					MNM1(S3,SMX)
7	4B5–21732–00	SEAL 1	1					
8	92014–06014	BOLT, BUTTON HEAD	2					
9	4B5–27476–00	CAP 2	1					
10	90183–05M02	NUT, SPRING	3					
11	4B5–27413–00	COVER, FOOTREST	1					
12	90110–06200	BOLT, HEXAGON SOCKET HEAD	1					
13	97702–50016	SCREW, TAPPING	2					
14	4B5–27423–00	COVER, FOOTREST	1					
15	5KE–28345–10	MOLE 1	1					
16	4B5–21669–00	SEAL	1					
17	90110–06200	BOLT, HEXAGON SOCKET HEAD	1					
18	97702–50016	SCREW, TAPPING	2					
19	4B5–2171L–00–P0	MOLE, SIDE COVER 1	1					MNM1
	4B5–2171L–00–P1	MOLE, SIDE COVER 1	1					SMX(DPBMX,SMX)
	4B5–2171L–00–P2	MOLE, SIDE COVER 1	1					S3
20	90167–05076	SCREW, TAPPING	6					
21	4B5–2171M–00–P0	MOLE, SIDE COVER 2	1					MNM1
	4B5–2171M–00–P1	MOLE, SIDE COVER 2	1					SMX(DPBMX,SMX)
	4B5–2171M–00–P2	MOLE, SIDE COVER 2	1					S3

.yaxclub.ru

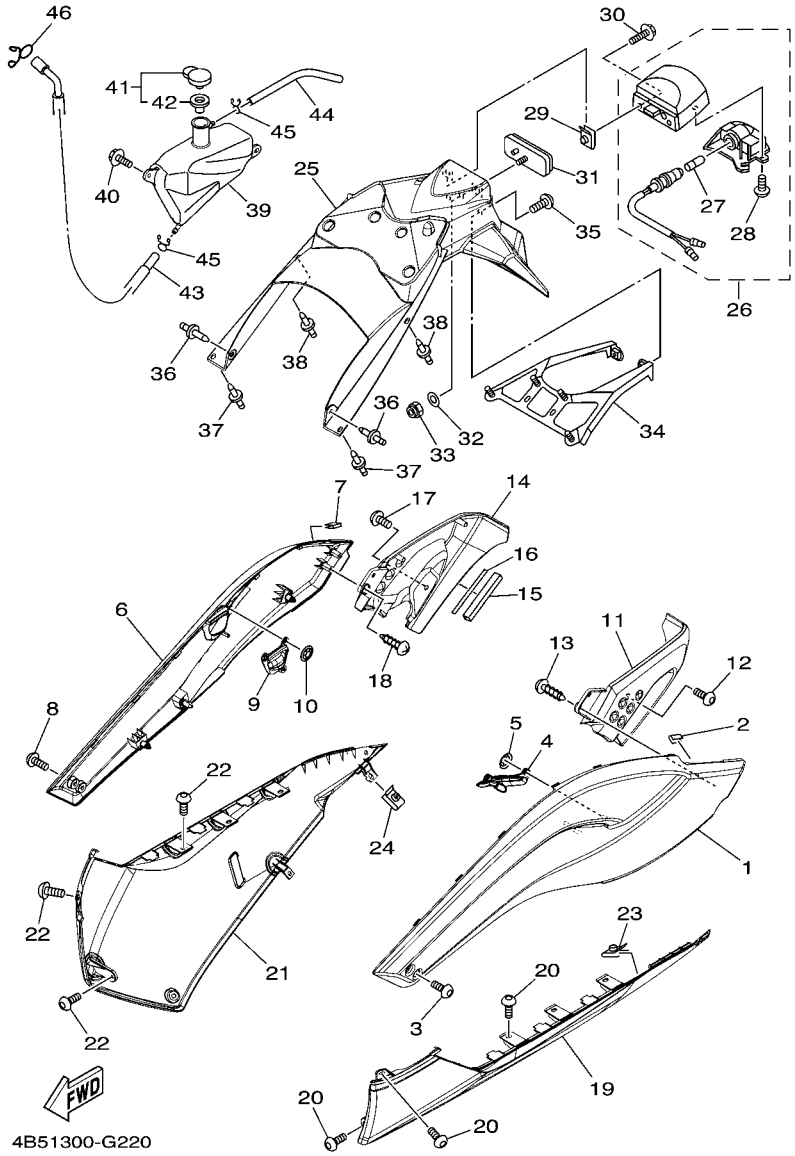

FIG. 22 SIDE COVER 2

REF. NO.	PART NO.	DESCRIPTION	4B56					REMARKS
22	90167–05076	SCREW, TAPPING	6					
23	90183–05042	NUT, SPRING	1					
24	90183–050A6	NUT, SPRING	1					
25	4B5–2152R–00	GUARD, MUD	1					
26	4B5–84745–00	LICENCE LIGHT UNIT ASSY	1					
27	4HC–84744–00	.BULB (12V-5W)	1					
28	97707–40612	.SCREW, TAPPING	2					
29	90183–05014	NUT, SPRING	2					
30	90119–05023	BOLT, WITH WASHER	2					
31	3Y6–85130–02	REAR REFLECTOR ASSY	1					
32	90201–05043	WASHER, PLATE	1					
33	95602–05100	NUT, U	1					
34	4B5–2172K–00	BRACKET 1	1					
35	90111–06109	BOLT,HEX. SOCKET BUTTON	2					
36	90269–06001	RIVET	2					
37	90269–06001	RIVET	2					
38	90269–06001	RIVET	2					
39	4B5–21871–00	TANK, RECOVERY	1					
40	90119–06137	BOLT, WITH WASHER	2					
41	1AA–21815–00	CAP	1					
42	1AA–21874–00	.GASKET	1					
43	4B5–21816–00	PIPE 1	1					
44	90445–09094	HOSE (L210)	1					
45	90467–090A2	CLIP	2					
46	90467–100A1	CLIP	1					

maxclub.ru

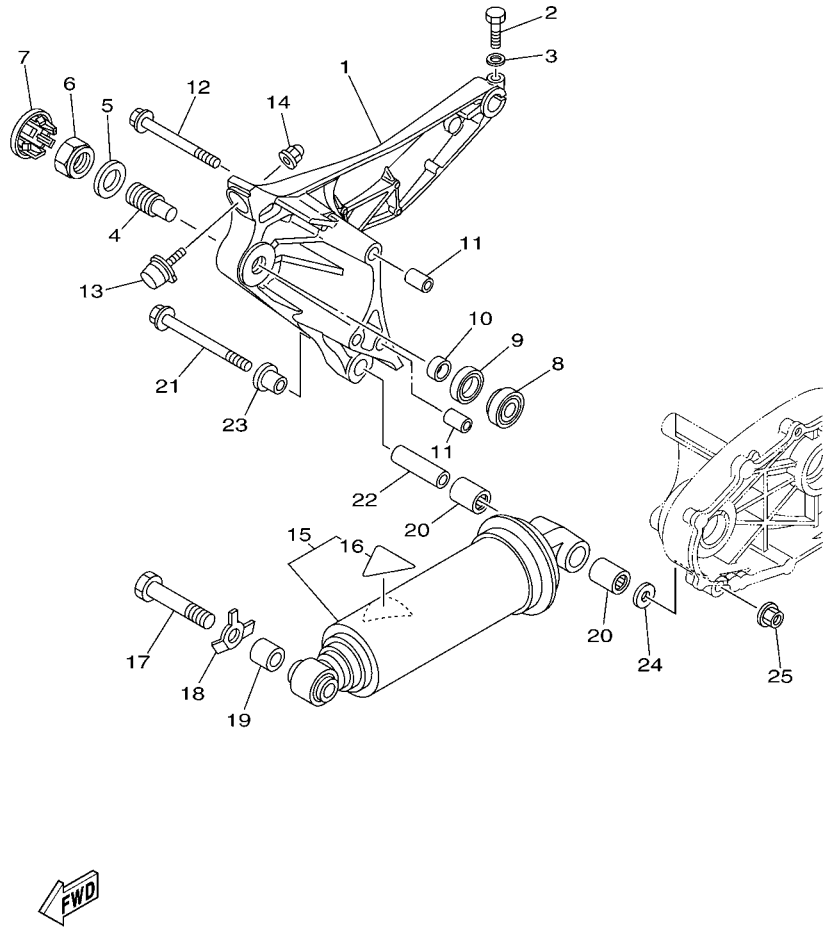

4B51300-G230

FIG. 23 REAR ARM & SUSPENSION

REF. NO.	PART NO.	DESCRIPTION	4B56					REMARKS
1	4B5–22171–10–33	ARM, REAR 1	1					YB
2	97002–08035	BOLT	1					
3	92902–08600	WASHER, PLATE	1					
4	15B–22141–00	SHAFT, PIVOT	1					
5	90201–22018	WASHER, PLATE	1					
6	1J7–22143–00	NUT	1					
7	4BH–2219X–00	COVER	1					
8	93332–00010	BEARING	1					
9	93102–25017	OIL SEAL	1					
10	90387–17011	COLLAR	1					
11	99530–14016	PIN, DOWEL	2					
12	95812–10100	BOLT, FLANGE	3					
13	4B5–22426–00	BUMP, STOP	1					
14	90176–06016	NUT, CROWN	1					
15	5VU–22210–00	SHOCK ABSORBER ASSY, REAR	1					
16	4AA–22259–40	.LABEL, WARNING	1					
17	90101–16003	BOLT	1					
18	4B5–22243–00	WASHER 1	1					
19	90387–16019	COLLAR	1					
20	93317–41761	BEARING	2					
21	90105–12053	BOLT, FLANGE	1					
22	90387–12003	COLLAR	1					
23	90387–12039	COLLAR	1					
24	90201–12043	WASHER, PLATE	1					
25	95602–12200	NUT, SELF-LOCKING	1					

maxclub.ru

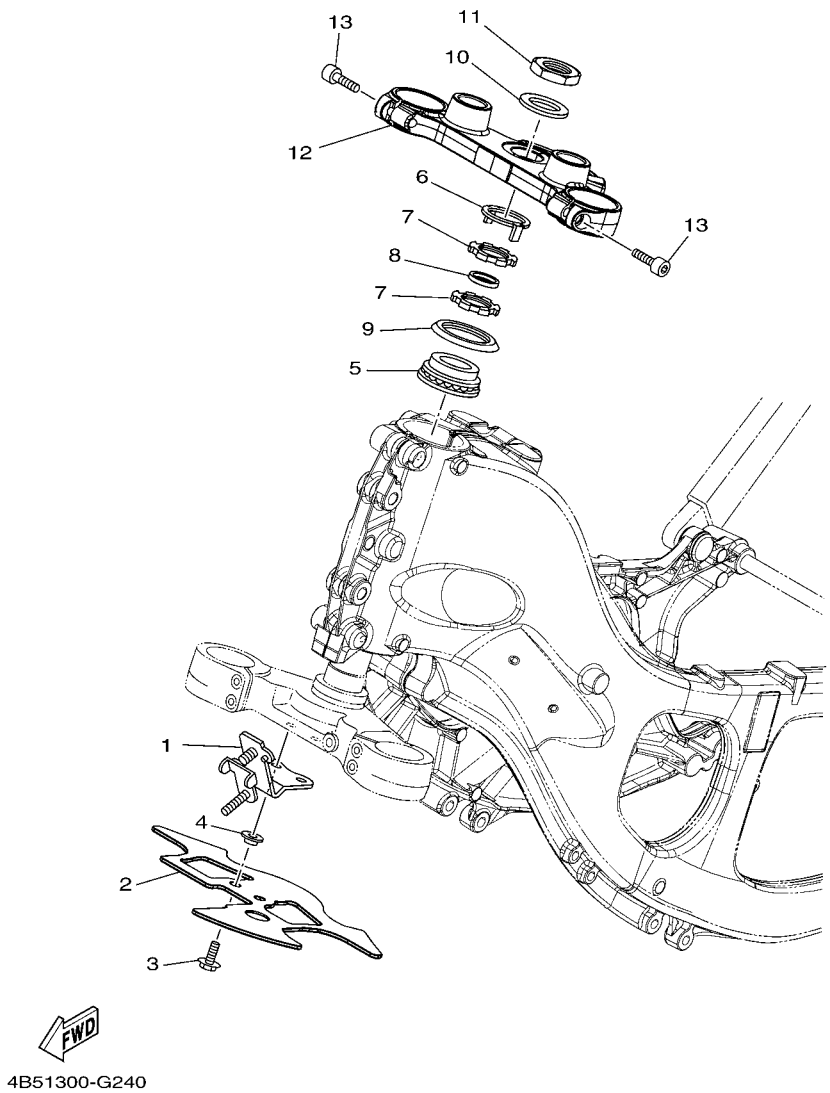

FIG. 24 STEERING

REF. NO.	PART NO.	DESCRIPTION	4B56					REMARKS
1	4B5–23377–00	BRACKET, HORN	1					
2	4B5–23818–00	COVER, STEERING	1					
3	90119–06193	BOLT, WITH WASHER	2					
4	90387–062M9	COLLAR	2					
5	93399–99932	BEARING	1					
6	5VY–23418–00	WASHER, SPECIAL	1					
7	90179–30691	NUT	2					
8	90202–30235	WASHER, PLATE	1					
9	4XV–23415–01	COVER, BALL RACE 1	1					
10	90201–28017	WASHER, PLATE	1					
11	90170–28419	NUT	1					
12	4B5–Y2343–00	CROWN, HANDLE	1					
13	91312–08030	BOLT	2					

maxclub.ru

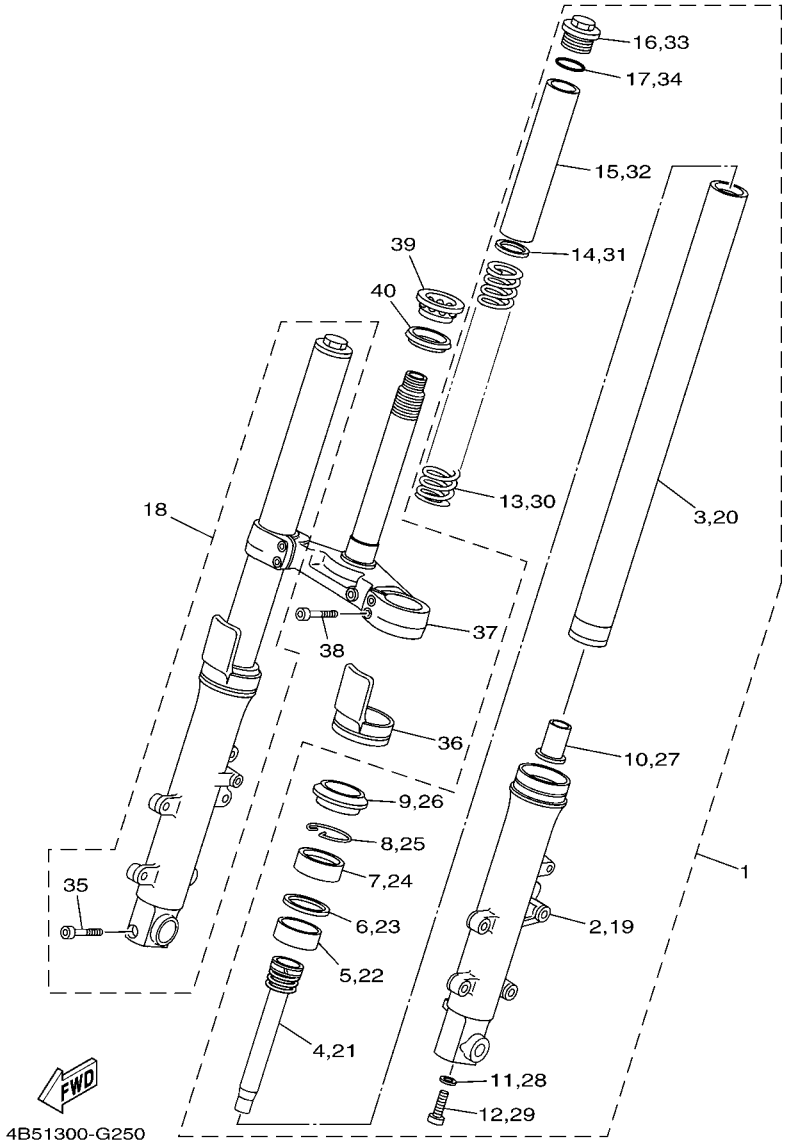

FIG. 25 FRONT FORK

REF. NO.	PART NO.	DESCRIPTION	4B56					REMARKS
1	4B5–23102–00	FRONT FORK ASSY (L.H)	1					
2	4B5–23126–00	.TUBE, OUTER (LEFT)	1					
3	4B5–23110–00	.INNER TUBE COMP.1	1					
4	4B5–23170–00	.CYLINDER COMP., FRONT FORK	1					
5	5EB–23125–00	.METAL, SLIDE 1	1					
6	4V4–23146–L0	.WASHER, OIL SEAL	1					
7	4PU–23145–01	.OIL SEAL	1					
8	4V4–23153–L0	.RING, SNAP	1					
9	4PU–23144–00	.SEAL, DUST	1					
10	4YR–23173–00	.SPINDLE, TAPER	1					
11	509–23158–L0	.GASKET	1					
12	278–23181–50	.BOLT, HEXAGON SOCKET HEAD	1					
13	4B5–23141–00	.SPRING, FRONT FORK	1					
14	3LR–23149–00	.WASHER, SPRING UPPER	1					
15	5WM–23118–00	.SPACER	1					
16	3TJ–23111–00	.BOLT, CAP	1					
17	4V4–23188–L0	.O-RING	1					
18	4B5–23103–00	FRONT FORK ASSY (R.H)	1					
19	4B5–23136–00	.TUBE, OUTER (RIGHT)	1					
20	4B5–23110–00	.INNER TUBE COMP.1	1					
21	4B5–23170–00	.CYLINDER COMP., FRONT FORK	1					
22	5EB–23125–00	.METAL, SLIDE 1	1					
23	4V4–23146–L0	.WASHER, OIL SEAL	1					
24	4PU–23145–01	.OIL SEAL	1					
25	4V4–23153–L0	.RING, SNAP	1					
26	4PU–23144–00	.SEAL, DUST	1					
27	4YR–23173–00	.SPINDLE, TAPER	1					

maxclub.ru

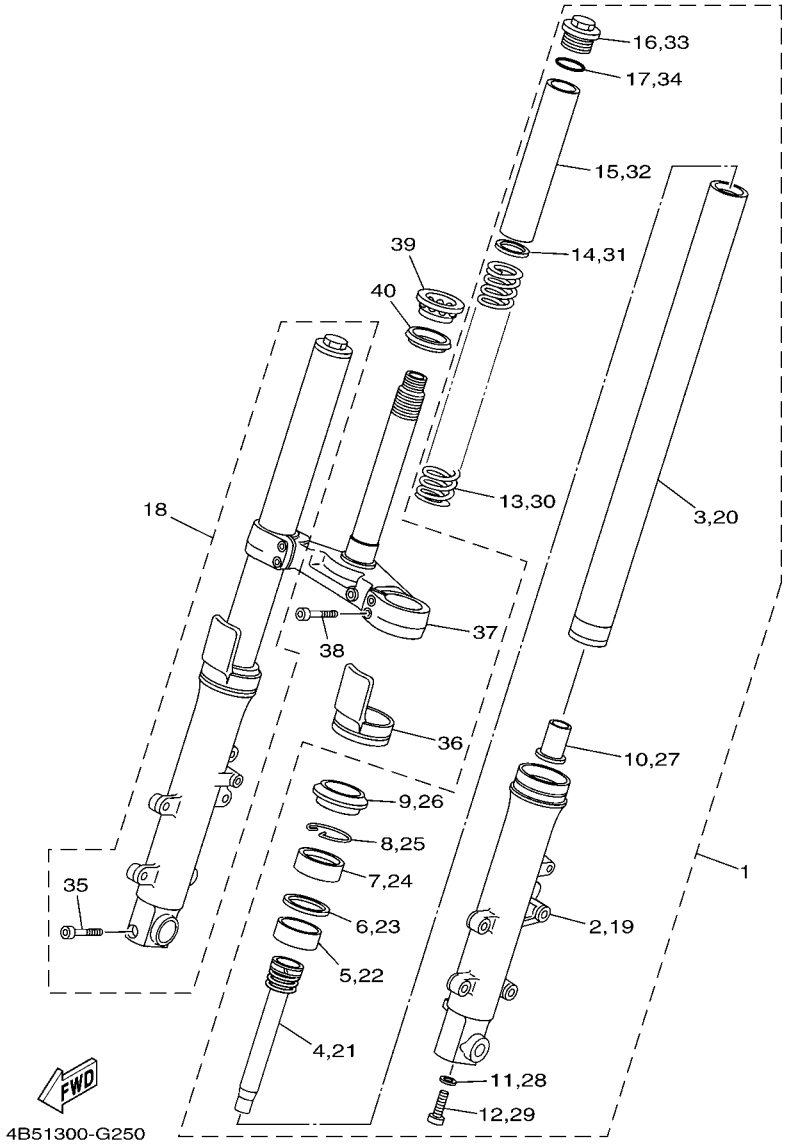

FIG. 25 FRONT FORK

REF. NO.	PART NO.	DESCRIPTION	4B56					REMARKS
28	509–23158–L0	.GASKET	1					
29	278–23181–50	.BOLT, HEXAGON SOCKET HEAD	1					
30	4B5–23141–00	.SPRING, FRONT FORK	1					
31	3LR–23149–00	.WASHER, SPRING UPPER	1					
32	5WM–23118–00	.SPACER	1					
33	3TJ–23111–00	.BOLT, CAP	1					
34	4V4–23188–L0	.O-RING	1					
35	91314–08040	.BOLT	1					
36	4PU–2331G–00	COVER	2					
37	4B5–23340–00	UNDER BRACKET COMP.	1					
38	91314–08025	BOLT	4					
39	93399–99957	BEARING	1					
40	3FV–23462–00	SEAL, STEERING	1					

.maxclub.ru

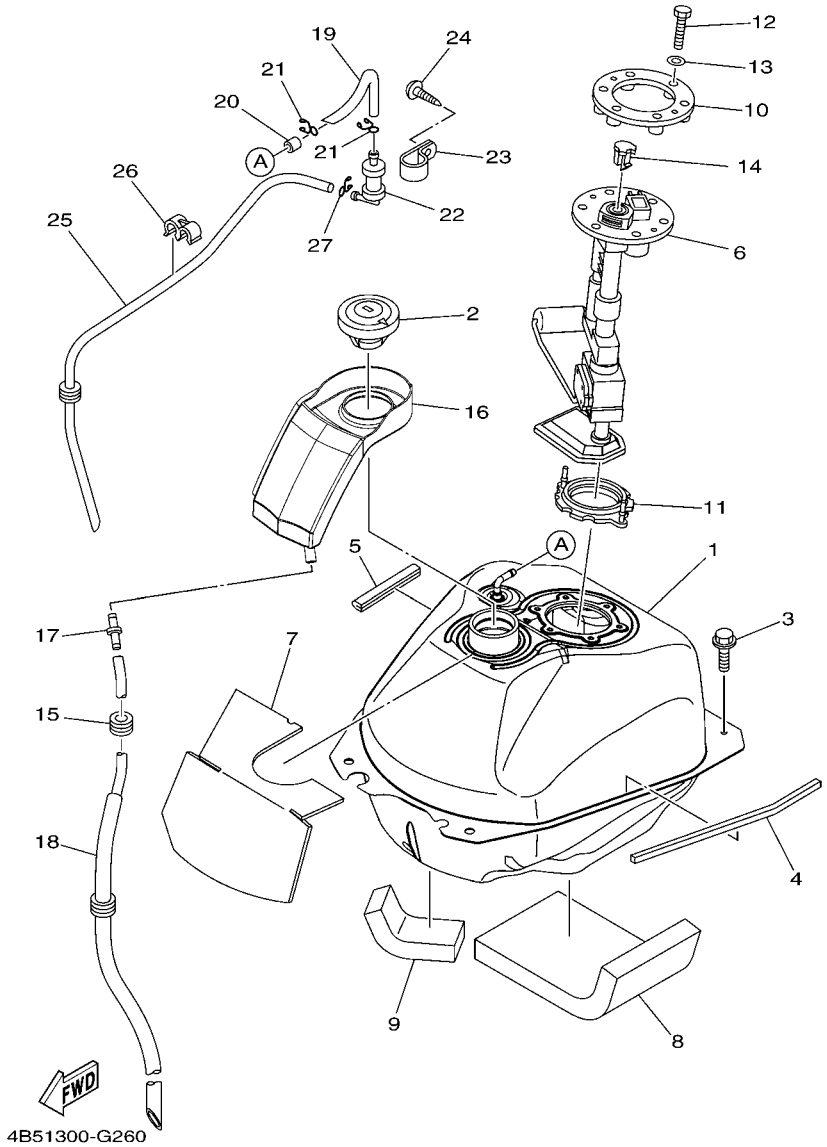

FIG. 26 FUEL TANK

REF. NO.	PART NO.	DESCRIPTION	4B56					REMARKS
1	4B5–24110–00	FUEL TANK COMP.	1					
2	54K–24602–00	CAP ASSY	1					
3	90119–06200	BOLT, WITH WASHER	4					
4	4B5–24181–00	DAMPER, LOCATING 1	1					
5	4BP–24188–00	MOLD, FUEL TANK	1					
6	4B5–13907–00	FUEL PUMP COMP.	1					
7	4B5–24182–00	DAMPER, LOCATING 2	1					
8	4B5–24184–00	DAMPER, LOCATING 4	1					
9	4B5–24185–00	DAMPER, LOCATING 5	1					
10	4B5–24491–00	BRACKET, FUEL PUMP	1					
11	5CA–2414G–01	SEAL	1					
12	97002–05020	BOLT	6					
13	92902–05600	WASHER, PLATE	6					
14	5VU–24135–00	CLAMP 1	1					
15	90480–13018	GROMMET	1					
16	4B5–2414A–00	COVER, FILLER	1					
17	4JP–21753–00	BOSS, CONNECTOR	1					
18	4B5–24318–00	PIPE, OVERFLOW	1					
19	4B5–24313–00	PIPE 3	1					
20	4B5–24141–00	PROTECTOR, FUEL TANK	1					
21	90467–090A2	CLIP	2					
22	5RB–24180–00	ROLL OVER VALVE ASSY	1					
23	4B5–24135–00	CLAMP 1	1					
24	97702–50014	SCREW, TAPPING	1					
25	4B5–24314–00	PIPE 4	1					
26	90464–10M38	CLAMP	1					
27	90467–090A2	CLIP	1					

maxclub.ru

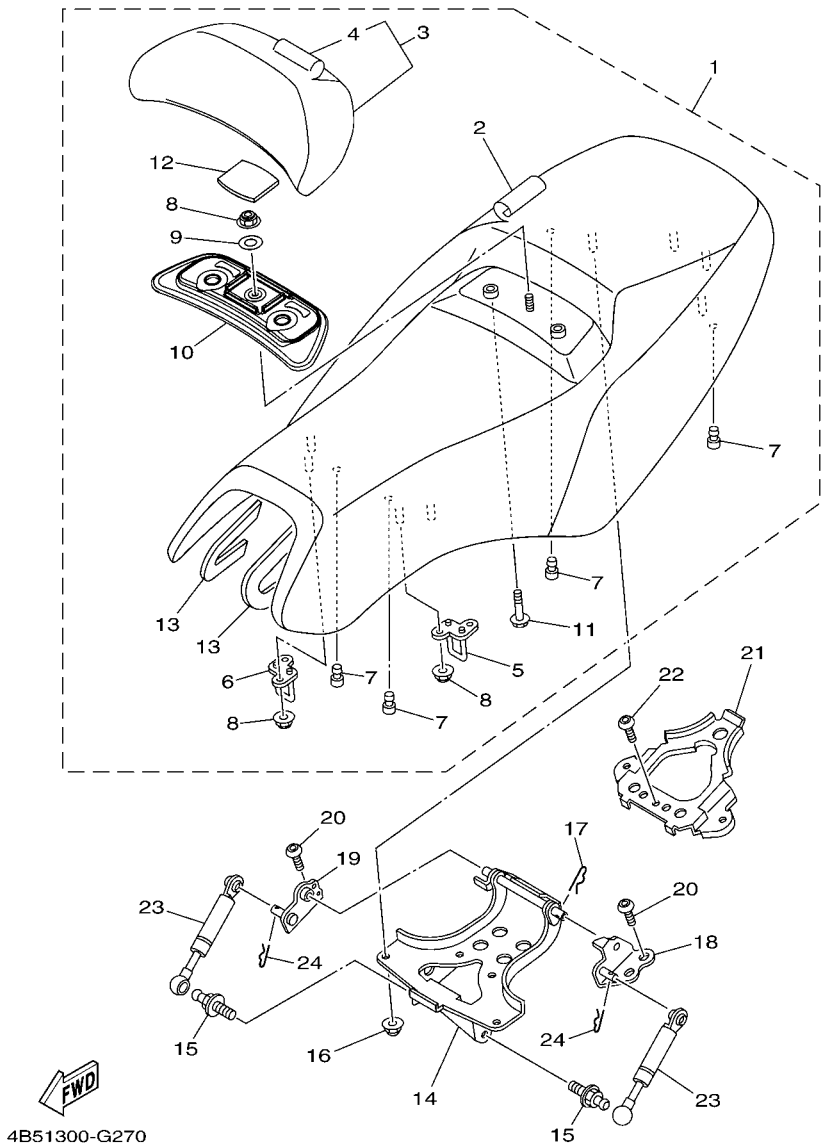

FIG. 27 SEAT

REF. NO.	PART NO.	DESCRIPTION	4B56					REMARKS
1	4B5–24730–10	DOUBLE SEAT ASSY	1					FOR MNM1
	4B5–24730–00	DOUBLE SEAT ASSY	1					FOR DPBMX,S3,SMX
2	4B5–24731–10	.COVER, SEAT	1					FOR MNM1
	4B5–24731–00	.COVER, SEAT	1					FOR DPBMX,S3,SMX
3	4B5–24790–10	.SEAT BACK ASSY	1					FOR MNM1
	4B5–24790–00	.SEAT BACK ASSY	1					FOR DPBMX,S3,SMX
4	4B5–24791–10	..COVER, SEAT BACK	1					FOR MNM1
	4B5–24791–00	..COVER, SEAT BACK	1					FOR DPBMX,S3,SMX
5	4B5–24718–00	.BRACKET, SEAT	1					
6	4B5–24728–00	.BRACKET, SEAT	1					
7	5SL–24723–00	.DAMPER, SEAT	4					
8	95602–06200	.NUT, SELF-LOCKING	5					
9	4CY–24722–00	.WASHER, SPECIAL	1					
10	4B5–24752–00	.PLATE	1					
11	95802–06025	.BOLT, FLANGE	2					
12	4B5–24724–00	.DAMPER, SEAT	1					
13	4B5–24723–00	.DAMPER, SEAT	2					
14	4B5–24726–00	HINGE, SEAT	1					
15	4B5–2474E–00	ARM	2					
16	90176–06016	NUT, CROWN	4					
17	90468–18121	CLIP	1					
18	4B5–24769–00	HINGE, SEAT	1					
19	4B5–24779–00	HINGE, SEAT 2	1					
20	92012–08020	BOLT, BUTTON HEAD	4					
21	4B5–2475U–00	BRACKET, TAIL COVER	1					
22	92012–08020	BOLT, BUTTON HEAD	1					
23	4B5–2478G–00	STOPPER	2					

maxclub.ru

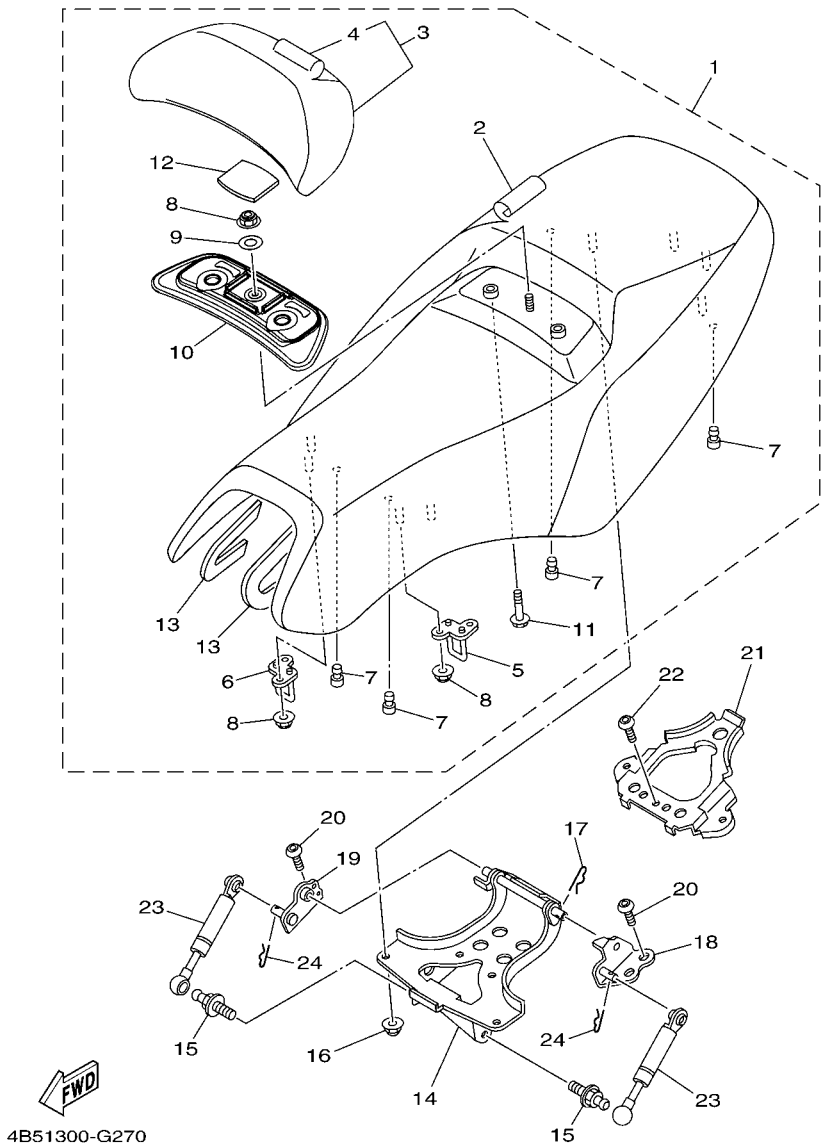

FIG. 27 SEAT

REF. NO.	PART NO.	DESCRIPTION	4B56					REMARKS
24	90468–16001	CLIP	2					

maxclub.ru

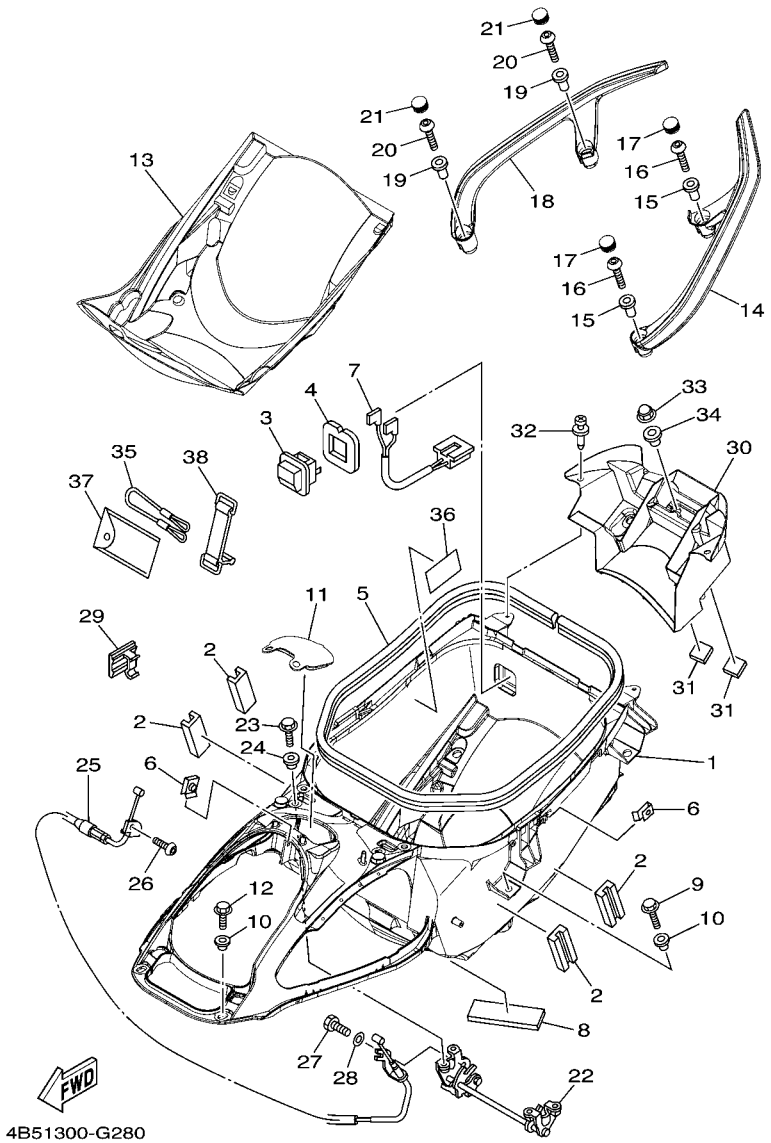

FIG. 28 SEAT 2

REF. NO.	PART NO.	DESCRIPTION	4B56					REMARKS
1	4B5–2473R–00	BOX 1	1					
2	4B5–24737–00	DAMPER, SEAT	4					
3	4HC–84770–00	LIGHT, ACCESORY	1					
4	5GJ–2839M–00	SEAL, BOX 2	1					
5	4B5–2173M–00	SEAL 3	1					
6	90183–05042	NUT, SPRING	3					
7	4B5–82583–00	BAND	1					
8	5GJ–28428–00	SEAL 1	1					
9	95822–06020	BOLT, FLANGE	8					
10	90387–06170	COLLAR	10					
11	4B5–2482H–00	CAP	1					
12	95022–06014	BOLT, FLANGE	2					
13	4B5–24747–00	DAMPER, SEAT	1					
14	4B5–2474A–00–P0	ASSIST, GRIP	1					UR FOR MNM1
	4B5–2474A–00–P1	ASSIST, GRIP	1					UR FOR DPBMX
	4B5–2474A–00–P2	ASSIST, GRIP	1					UR FOR S3
	4B5–2474A–00–P3	ASSIST, GRIP	1					UR FOR SMX
15	90387–08068	COLLAR	2					
16	92012–08035	BOLT, BUTTON HEAD	2					
17	4B5–2476U–00	PROTECTOR,1	2					
18	4B5–2474W–00–P0	ASSIST,GRIP 2	1					UR FOR MNM1
	4B5–2474W–00–P1	ASSIST,GRIP 2	1					UR FOR DPBMX
	4B5–2474W–00–P2	ASSIST,GRIP 2	1					UR FOR S3
	4B5–2474W–00–P3	ASSIST,GRIP 2	1					UR FOR SMX
19	90387–08068	COLLAR	2					
20	92012–08035	BOLT, BUTTON HEAD	2					
21	4B5–2476U–00	PROTECTOR,1	2					

maxclub.ru

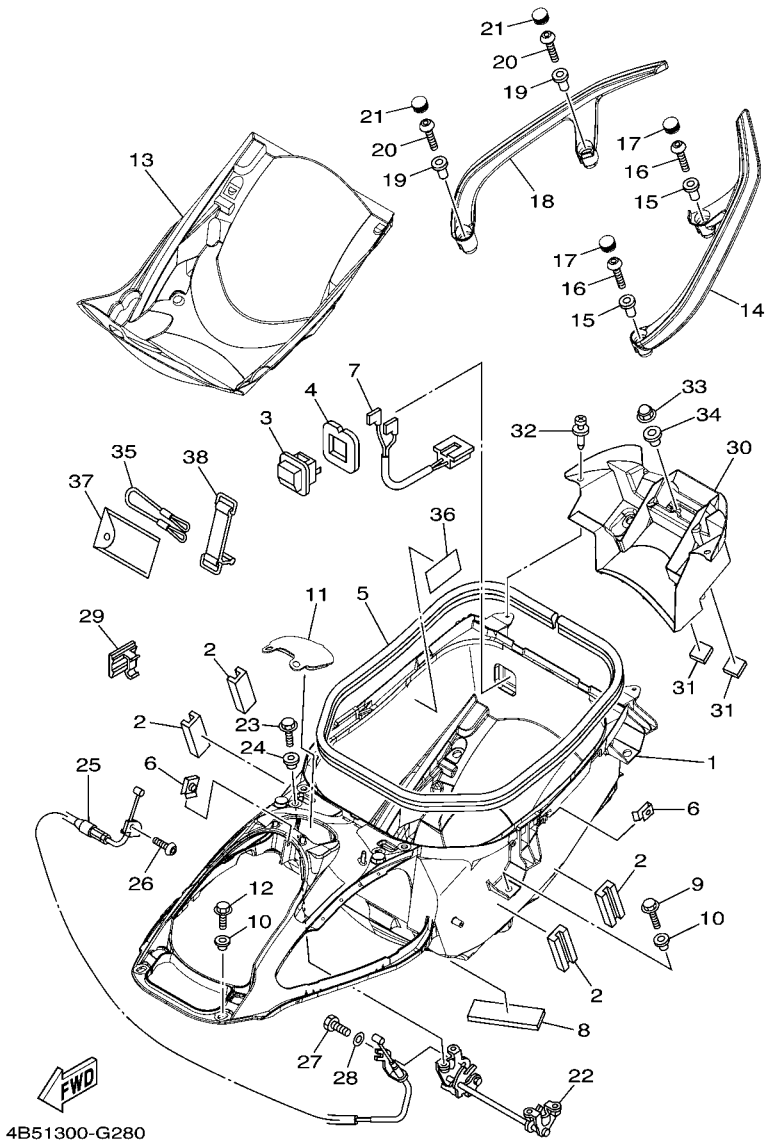

FIG. 28 SEAT 2

REF. NO.	PART NO.	DESCRIPTION	4B56					REMARKS
22	4B5–24780–00	SEAT LOCK ASSY	1					
23	95822–06016	BOLT, FLANGE	4					
24	90387–06170	COLLAR	4					
25	4B5–2478D–00	SEAT LOCK CABLE ASSY	1					
26	92012–05010	BOLT, BUTTON HEAD	1					
27	97002–05010	BOLT	1					
28	92902–05600	WASHER, PLATE	1					
29	90464–07002	CLAMP	1					
30	4B5–2163A–00	COVER, REAR FENDER 1	1					
31	2TV–21639–00	DAMPER 2	2					
32	90269–06081	RIVET	2					
33	90176–06017	NUT, CROWN	4					
34	90560–08066	SPACER	4					
35	4B5–21398–00	HANGER, HELMET	1					
36	5VU–21668–00	LABEL, TIRE	1					
37	4B5–28100–00	TOOL KIT	1					
38	3TJ–82131–00	BAND, BATTERY	1					

maxclub.ru

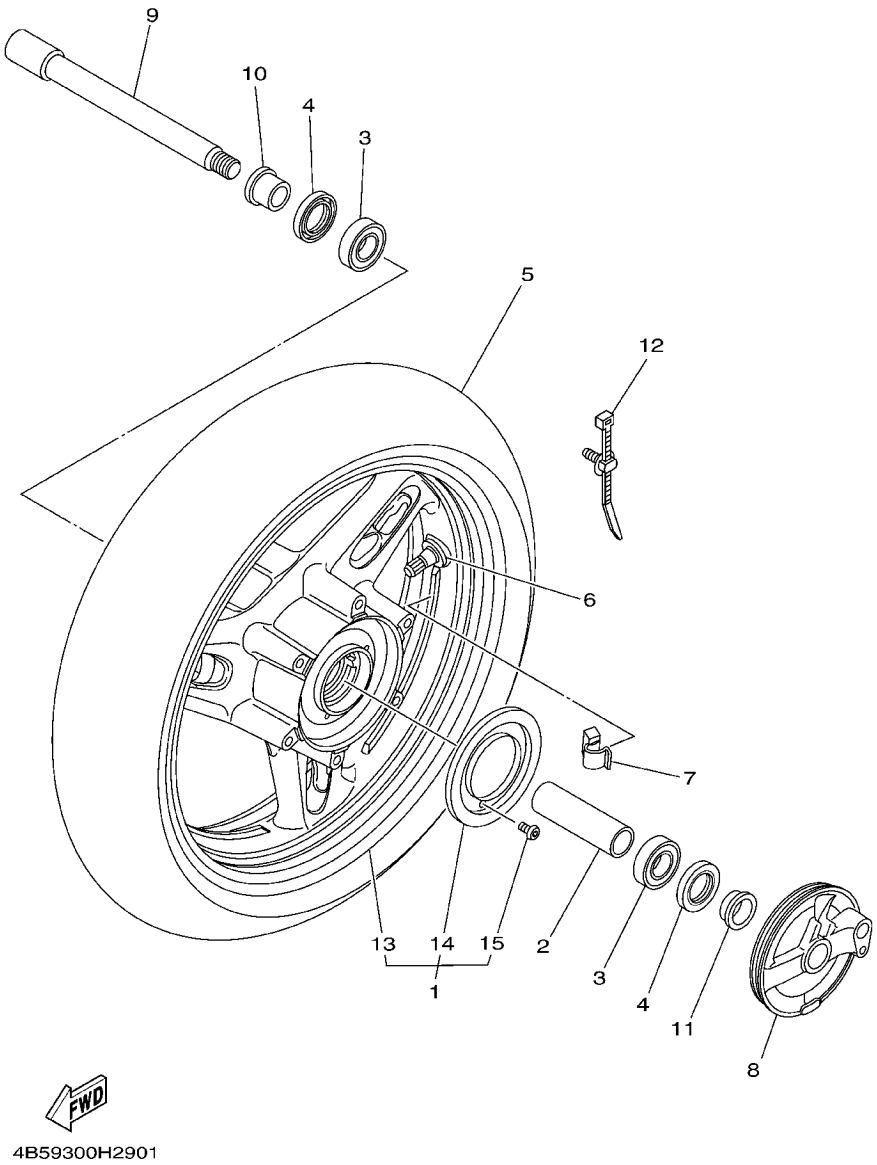

FIG. 29 FRONT WHEEL

REF. NO.	PART NO.	DESCRIPTION	4B56					REMARKS
1	4B5–W2516–11	CAST WHEEL, FRONT	1					
2	5EA–25117–00	SPACER, BEARING	1					
3	93306–00420	BEARING	2					
4	93106–28043	OIL SEAL	2					
5	94112–15008	TIRE(120/70R15M/C 56H BT011F)	1					UR BRIDGESTONE
	94112–15009	TIRE(120/70R15M/C56H GPR-100F)	1					UR DUNLOP
6	93900–00030	VALVE, RIM (TR412)	1					TAIHEIYO
7	5MT–25398–00	BALANCER, WHEEL (10G)	1					UN
	5MT–25398–10	BALANCER, WHEEL (20G)	1					UN
	5MT–25398–20	BALANCER, WHEEL (30G)	1					UN
8	4B5–2517A–00	HOUSING, SENSOR FRONT	1					
9	4XV–25181–10	AXLE, WHEEL	1					
10	90387–22016	COLLAR	1					
11	4B5–25183–00	COLLAR, WHEEL	1					
12	5RU–12491–00	CLAMP 1	1					
13	4B5–25168–11	.CAST WHEEL, FRONT	1					
14	4B5–2517G–00	.ROTOR, SENSOR	1					
15	90149–05029	.SCREW	3					

raxclub.ru

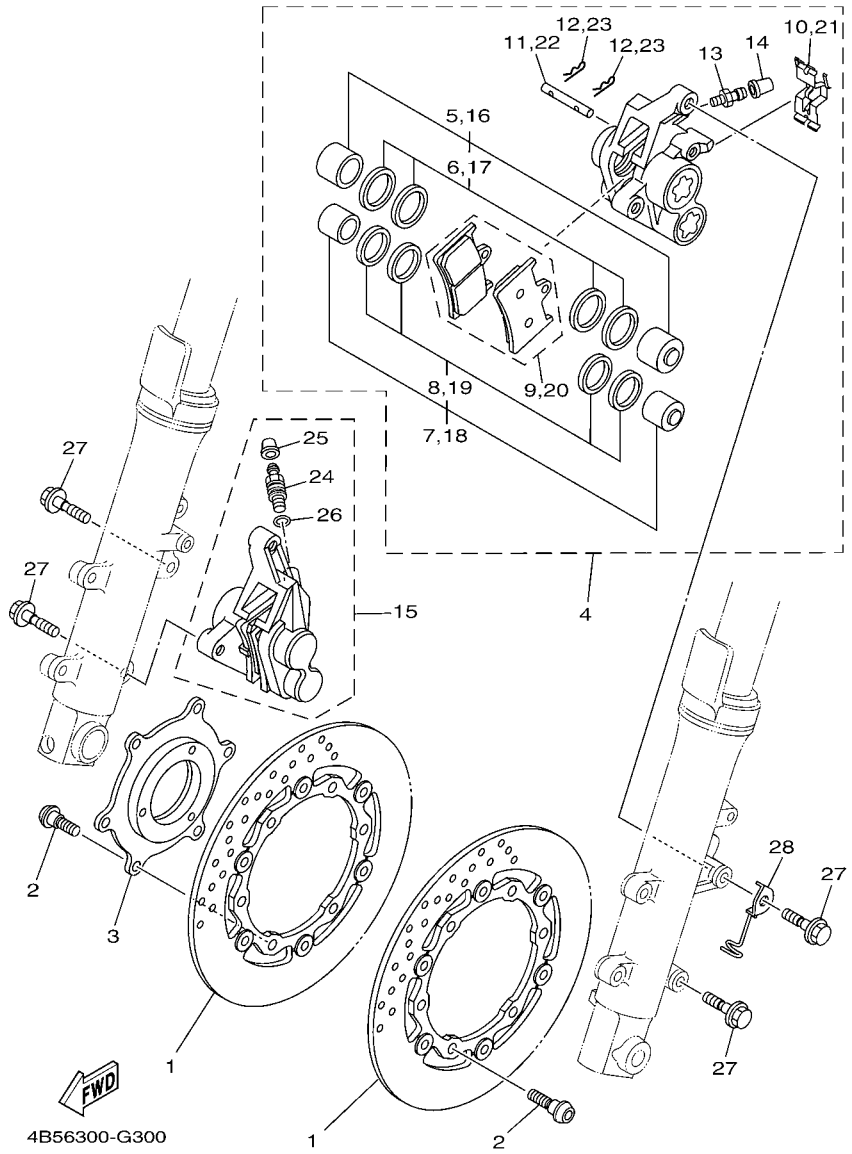

FIG. 30 FRONT BRAKE CALIPER

REF. NO.	PART NO.	DESCRIPTION	4B56					REMARKS
1	4B5–2581T–00	DISK BRAKE ASSY	2					
2	90109–064G6	BOLT	12					
3	4B5–2514A–00	RING, WHEEL 1	1					
4	4B5–2580T–00	CALIPER ASSY (LEFT)	1					
5	4SV–W0057–10	.PISTON ASSY, CALIPER	1					
6	3GM–W0047–10	..CALIPER SEAL KIT	1					
7	4SV–W0057–00	.PISTON ASSY, CALIPER	1					
8	3MA–W0047–10	..CALIPER SEAL KIT	1					
9	4B5–W0045–00	.BRAKE PAD KIT	1					
10	13S–25919–00	.SUPPORT, PAD	1					
11	4SV–25924–00	.PIN, PAD	1					
12	3GM–25925–00	.CLIP	2					
13	1J3–25824–00	.SCREW, BLEED	1					
14	306–25825–01	.CAP	1					
15	4B5–2580U–10	CALIPER ASSY (RIGHT)	1					
16	4SV–W0057–10	.PISTON ASSY, CALIPER	1					
17	3GM–W0047–10	..CALIPER SEAL KIT	1					
18	4SV–W0057–00	.PISTON ASSY, CALIPER	1					
19	3MA–W0047–10	..CALIPER SEAL KIT	1					
20	4B5–W0045–00	.BRAKE PAD KIT	1					
21	13S–25919–00	.SUPPORT, PAD	1					
22	4SV–25924–00	.PIN, PAD	1					
23	3GM–25925–00	.CLIP	2					
24	5VS–25824–00	.SCREW, BLEED	1					
25	306–25825–01	.CAP	1					
26	5VS–25975–00	.RUBBER, BUSHING	1					
27	90105–10638	BOLT, FLANGE	4					

.iaxclub.ru

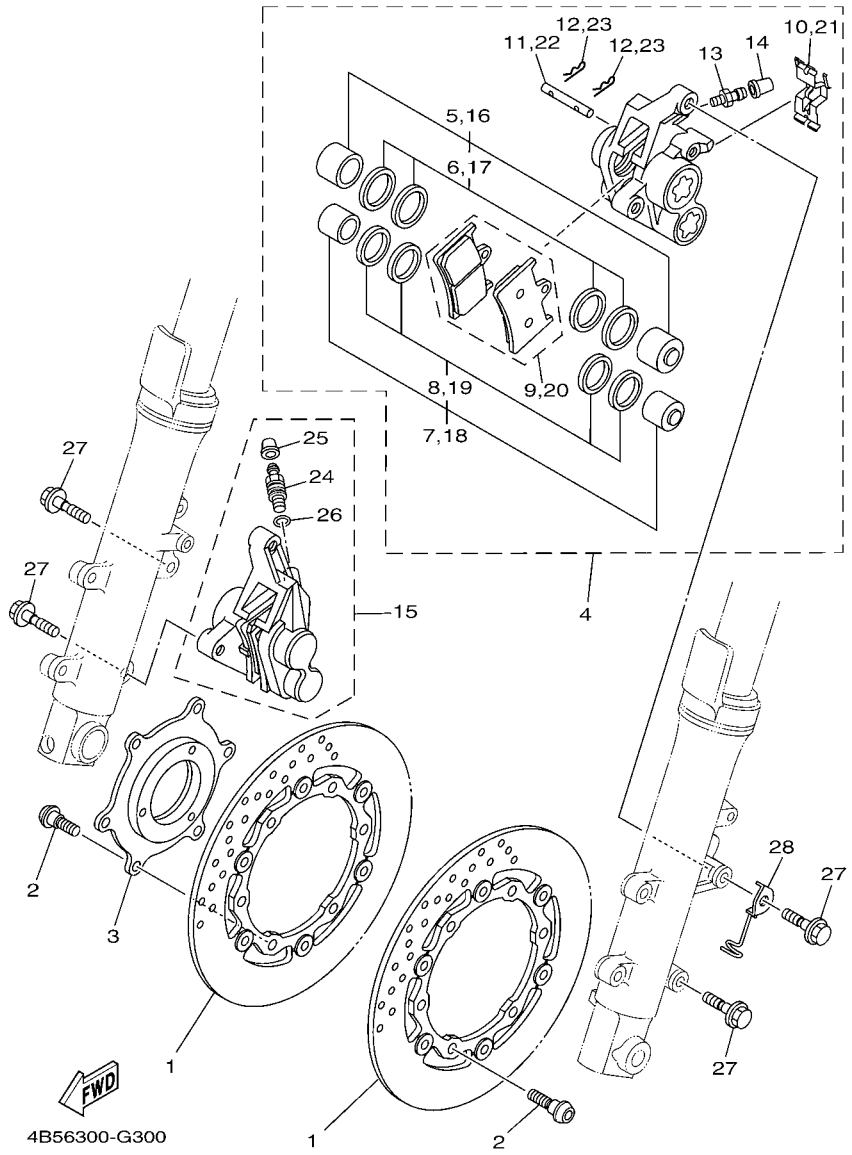

FIG. 30 FRONT BRAKE CALIPER

REF. NO.	PART NO.	DESCRIPTION	4B56					REMARKS
28	4B5–23317–00	HOLDER, CABLE	1					

maxclub.ru

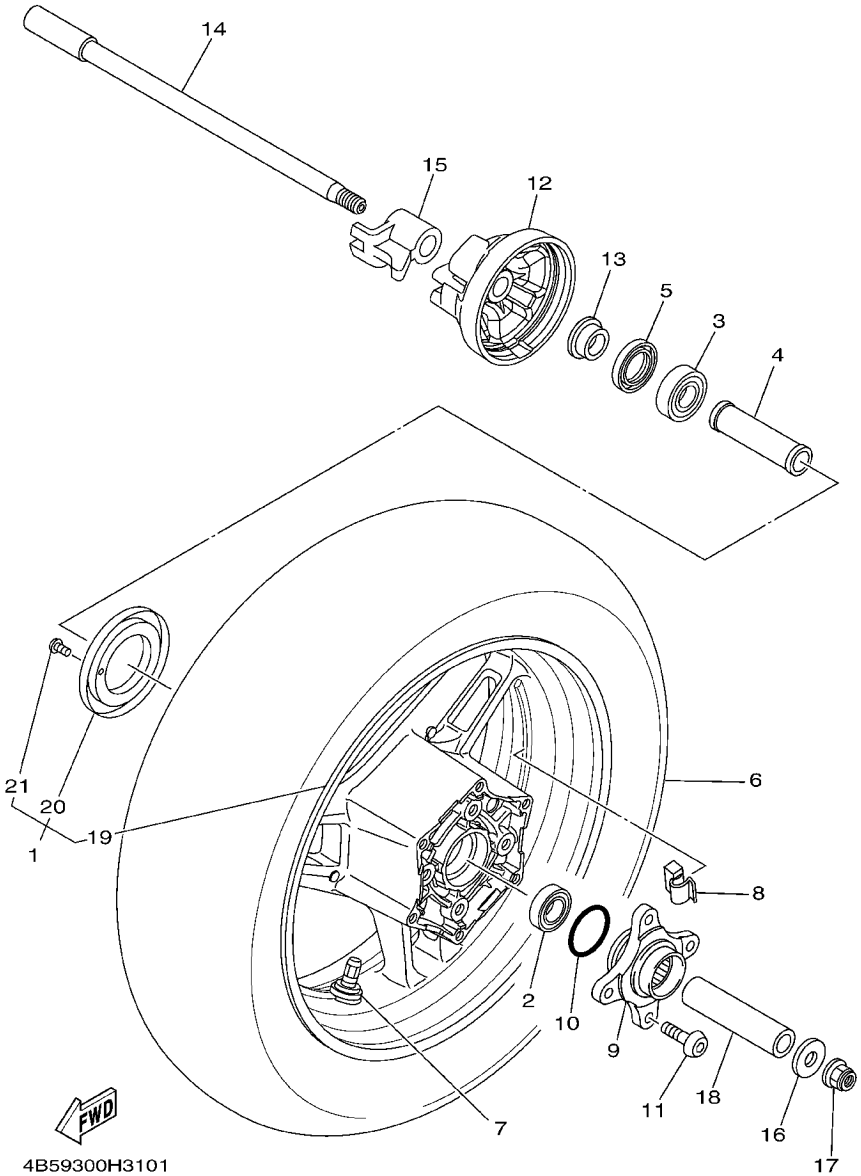

FIG. 31 REAR WHEEL

REF. NO.	PART NO.	DESCRIPTION	4B56					REMARKS
1	4B5–W2533–10	CAST WHEEL, REAR	1					
2	93306–20331	BEARING	1					
3	93306–30317	BEARING	1					
4	4B5–25317–00	SPACER, BEARING	1					
5	93102–25044	OIL SEAL	1					
6	94116–15011	TIRE(160/60R15M/C 67H BT012R)	1					UR BRIDGESTONE
	94116–15012	TIRE(160/60R15M/C 67H GPR-100)	1					UR DUNLOP
7	93900–00030	VALVE, RIM (TR412)	1					TAIHEIYO
8	5MT–25398–00	BALANCER, WHEEL (10G)	1					UN
	5MT–25398–10	BALANCER, WHEEL (20G)	1					UN
	5MT–25398–20	BALANCER, WHEEL (30G)	1					UN
9	5GJ–25366–00	CLUTCH, HUB	1					
10	93210–44704	O-RING	1					
11	90111–10036	BOLT,HEX. SOCKET BUTTON	4					
12	4B5–2537A–00	HOUSING, SENSOR REAR	1					
13	4B5–25377–10	COLLAR, WHEEL	1					
14	5GJ–25381–10	AXLE, WHEEL	1					
15	5VU–25383–A0	COLLAR, WHEEL	1					
16	90201–14022	WASHER, PLATE	1					
17	95602–14200	NUT, SELF-LOCKING	1					
18	90560–17306	SPACER	1					
19	4B5–25338–10	.CAST WHEEL, REAR	1					
20	4B5–2517G–00	.ROTOR, SENSOR	1					
21	90149–05029	.SCREW	3					

.iaxclub.ru

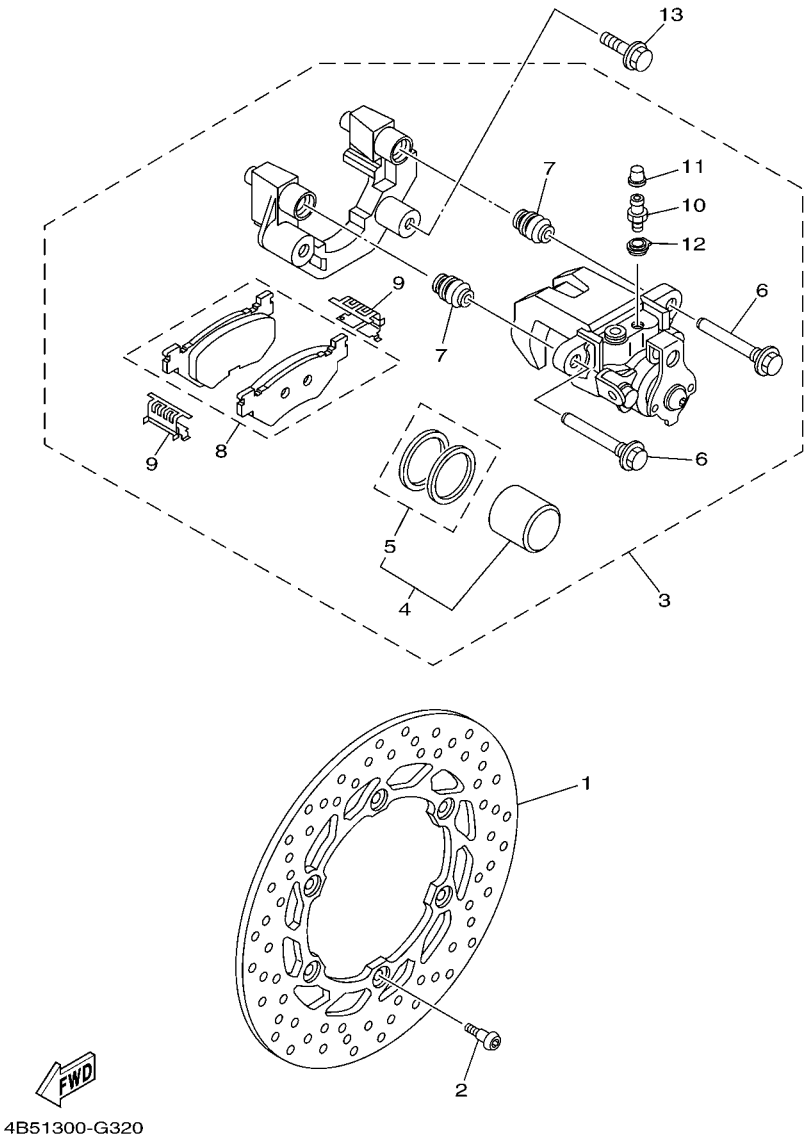

FIG. 32 REAR BRAKE CALIPER

REF. NO.	PART NO.	DESCRIPTION	4B56					REMARKS
1	4B5–2582V–00	DISC, REAR BRAKE 1	1					
2	90109–064G6	BOLT	6					
3	4B5–2580V–00	CALIPER ASSY, REAR 1	1					
4	4D9–W0057–00	.PISTON ASSY, CALIPER	1					
5	5GJ–W0047–01	..CALIPER SEAL KIT	1					
6	4D9–25914–10	.PIN, SLIDE	2					
7	4TT–25937–00	.BOOT 2	2					
8	5RU–W0046–00	.BRAKE PAD KIT 2	1					
9	4TT–25919–00	.SUPPORT, PAD	2					
10	5GM–25824–00	.SCREW, BLEED	1					
11	1D7–25825–00	.CAP	1					
12	5GM–25975–00	.RUBBER, BUSHING	1					
13	90105–10638	BOLT, FLANGE	2					

maxclub.ru

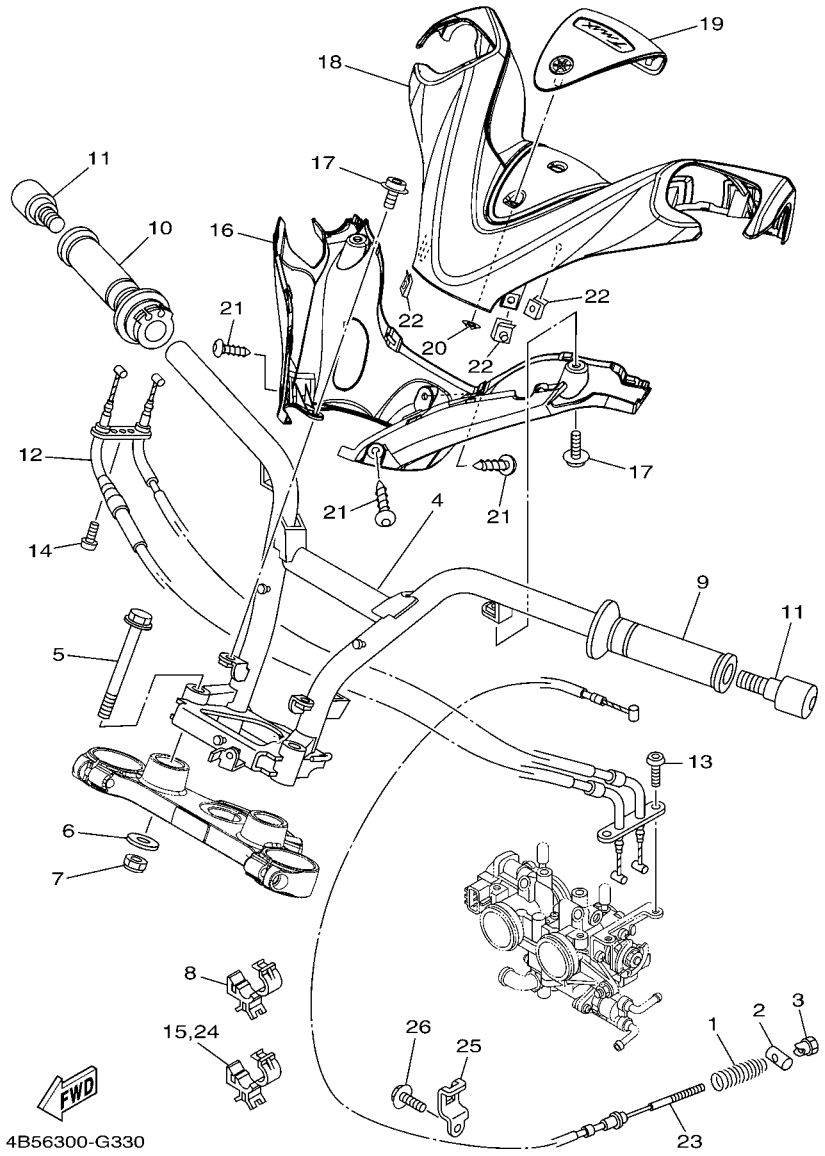

FIG. 33 STEERING HANDLE & CABLE

REF. NO.	PART NO.	DESCRIPTION	4B56					REMARKS
1	5VU–25333–00	SPRING, RETURN	1					
2	90249–12004	PIN	1					
3	90179–06018	NUT	1					
4	4B5–26110–10	HANDLE COMP.	1					
5	90105–10150	BOLT, FLANGE	2					
6	90201–10043	WASHER, PLATE	2					
7	95602–10100	NUT, U	2					
8	90464–20191	CLAMP	2					
9	4YR–26241–02	GRIP (LEFT)	1					
10	4YR–26240–02	GRIP ASSY	1					
11	3HX–26246–00	END, GRIP	2					
12	4B5–26301–00	THROTTLE CABLE ASSY	1					
13	92012–05012	BOLT, BUTTON HEAD	2					
14	98502–05020	SCREW, PAN HEAD	1					
15	90464–15192	CLAMP	1					
16	4B5–26144–00	COVER, HANDLEBAR LOWER 1	1					
17	90159–05032	SCREW, WITH WASHER	4					
18	4B5–26143–00	COVER, HANDLEBAR UPPER 1	1					
19	4B5–26145–00	COVER, HANDLEBAR UPPER 2	1					
20	90183–05068	NUT, SPRING	3					
21	90167–05079	SCREW, TAPPING	3					
22	90183–05042	NUT, SPRING	3					
23	4B5–2835X–00	WIRE	1					
24	90464–15192	CLAMP	1					
25	4B5–26131–00	GUIDE, CABLE 1	1					
26	95802–06010	BOLT, FLANGE	1					

maxclub.ru

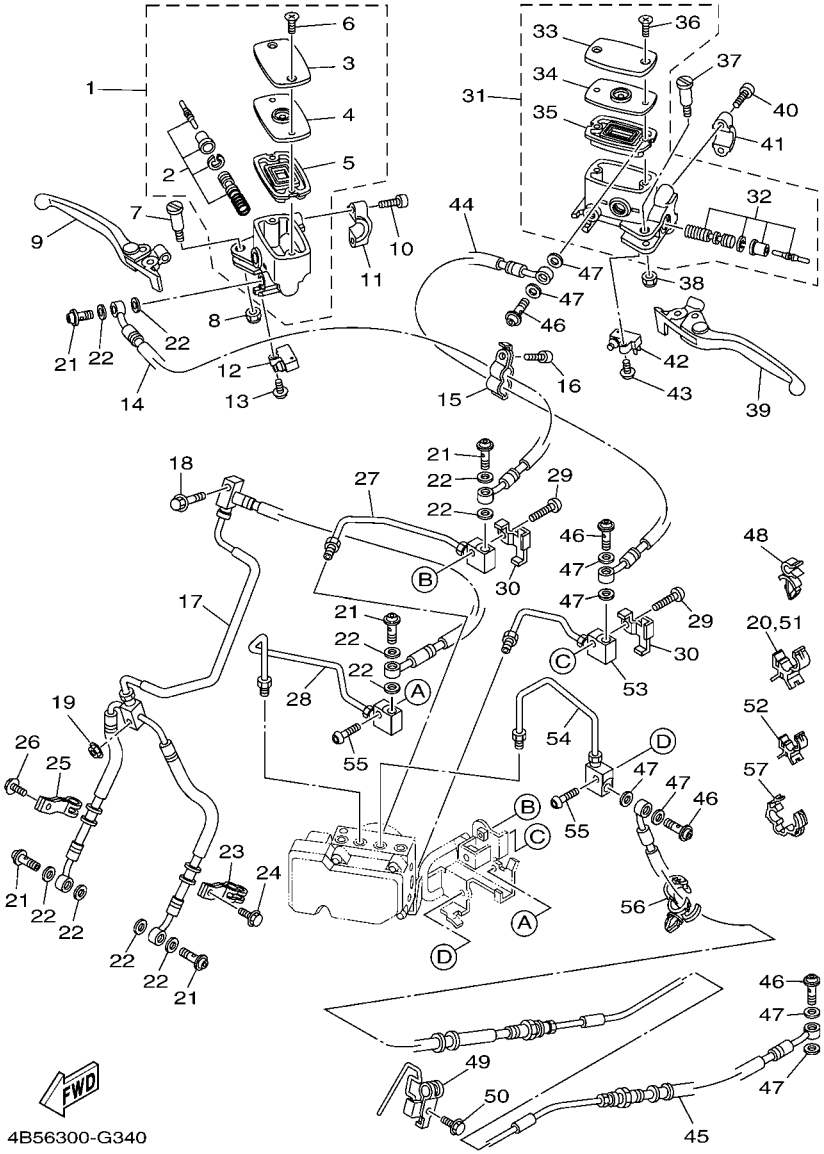

FIG. 34 FRONT MASTER CYLINDER

REF. NO.	PART NO.	DESCRIPTION	4B56					REMARKS
1	4B5–W2587–20	MASTER CYLINDER SUB ASSY	1					
2	4B5–W0041–00	.CYLINDER KIT, MASTER	1					
3	4B5–25852–00	.CAP, RESERVOIR	1					
4	4B5–25855–00	.BUSH,DIAPHRAGM	1					
5	4B5–25854–00	.GASKET, DIAPHRAGM	1					
6	5VS–2589H–00	.SCREW	2					
7	5VS–2589F–00	BOLT, LEVER	1					
8	95617–06100	NUT, U	1					
9	4B5–83922–00	LEVER 2	1					
10	5VS–26332–00	BOLT	2					
11	5VS–25867–00	BRACKET, MASTER CYLINDER	1					
12	36Y–82917–00	SWITCH	1					
13	97602–04214	SCREW, PAN HEAD WITH WASHER	1					
14	4B5–25874–00	HOSE, BRAKE	1					
15	4B5–25875–10	HOLDER, BRAKE HOSE 1	1					
16	91312–06016	BOLT	1					
17	4B5–25873–00	HOSE, BRAKE 2	1					
18	95022–06025	BOLT, FLANGE	1					
19	95702–06500	NUT, FLANGE	1					
20	90464–15192	CLAMP	1					
21	90401–10172	BOLT, UNION	5					
22	90430–10005	GASKET	10					
23	4B5–25886–00	HOLDER, BRAKE HOSE	1					
24	95802–06012	BOLT, FLANGE	1					
25	4B5–25875–00	HOLDER, BRAKE HOSE 1	1					
26	95802–06012	BOLT, FLANGE	1					
27	4B5–25883–00	PIPE, BRAKE 3	1					

.maxclub.ru

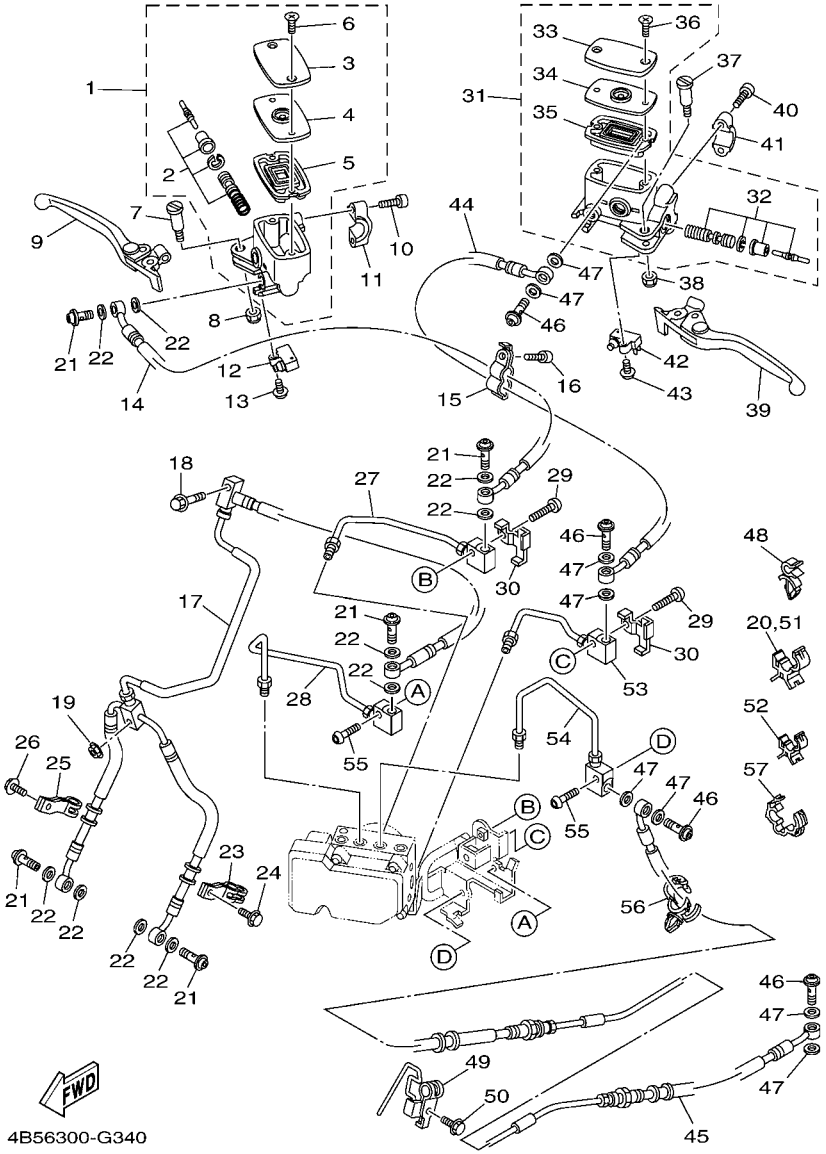

FIG. 34 FRONT MASTER CYLINDER

REF. NO.	PART NO.	DESCRIPTION	4B56					REMARKS
28	4B5–25882–00	PIPE, BRAKE 2	1					
29	92012–06025	BOLT, BUTTON HEAD	2					
30	4B5–2615E–00	PLATE, STOPPER	2					
31	4B5–W2587–30	MASTER CYLINDER SUB ASSY	1					
32	4B5–W0041–10	.CYLINDER KIT, MASTER	1					
33	4B5–25852–00	.CAP, RESERVOIR	1					
34	4B5–25855–00	.BUSH,DIAPHRAGM	1					
35	4B5–25854–00	.GASKET, DIAPHRAGM	1					
36	5VS–2589H–00	.SCREW	2					
37	5VS–2589F–00	BOLT, LEVER	1					
38	95617–06100	NUT, U	1					
39	4B5–83912–00	LEVER 1	1					
40	5VS–26332–00	BOLT	2					
41	5VS–25867–00	BRACKET, MASTER CYLINDER	1					
42	36Y–83980–01	FRONT STOP SWITCH ASSY	1					
43	97602–04214	SCREW, PAN HEAD WITH WASHER	1					
44	4B5–2584B–00	HOSE, BRAKE	1					
45	4B5–2584C–00	HOSE, BRAKE	1					
46	90401–10172	BOLT, UNION	4					
47	90430–10005	GASKET	8					
48	90464–10125	CLAMP	1					
49	4B5–25876–10	HOLDER, BRAKE HOSE 2	1					
50	95802–06010	BOLT, FLANGE	1					
51	90464–15192	CLAMP	1					
52	90464–10190	CLAMP	1					
53	4B5–2588B–00	PIPE, BRAKE 5	1					
54	4B5–2588C–00	PIPE, BRAKE 6	1					

.maxclub.ru

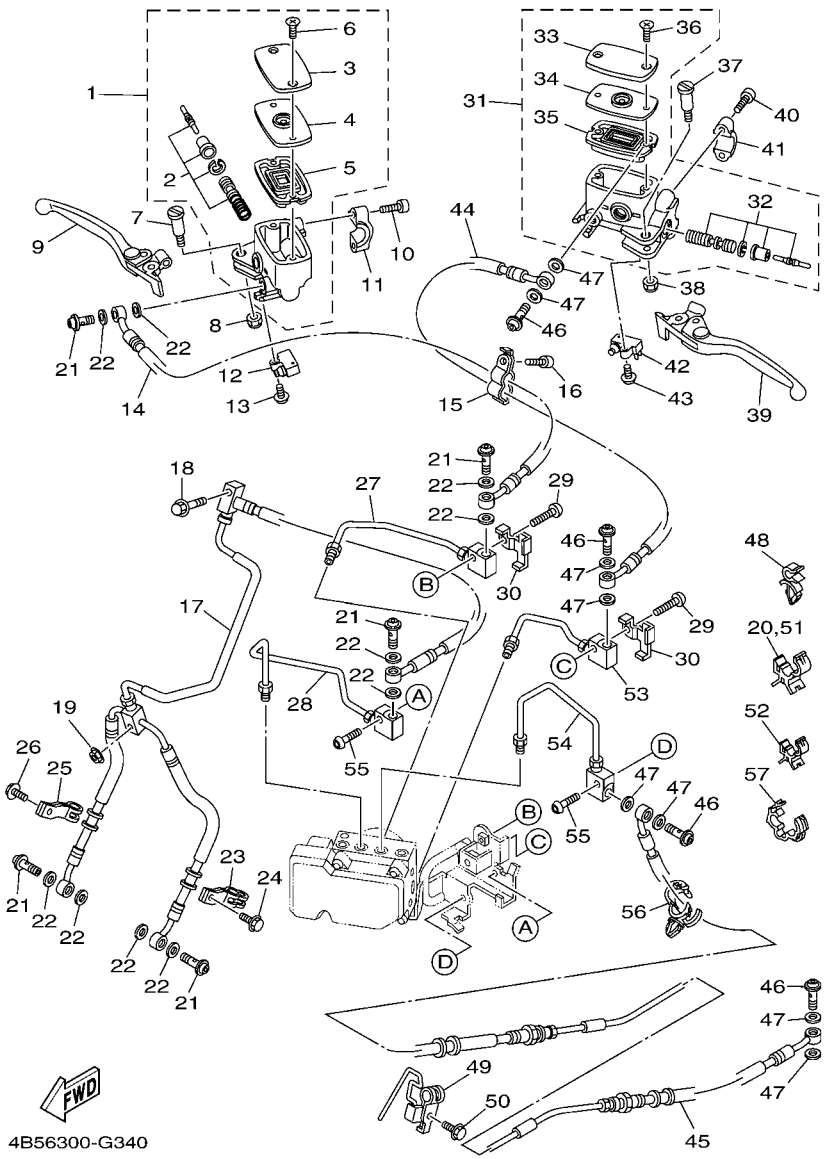

FIG. 34 FRONT MASTER CYLINDER

REF. NO.	PART NO.	DESCRIPTION	4B56					REMARKS
55	92012–06025	BOLT, BUTTON HEAD	2					
56	90464–20181	CLAMP	1					
57	90464–14003	CLAMP	2					

.maxclub.ru

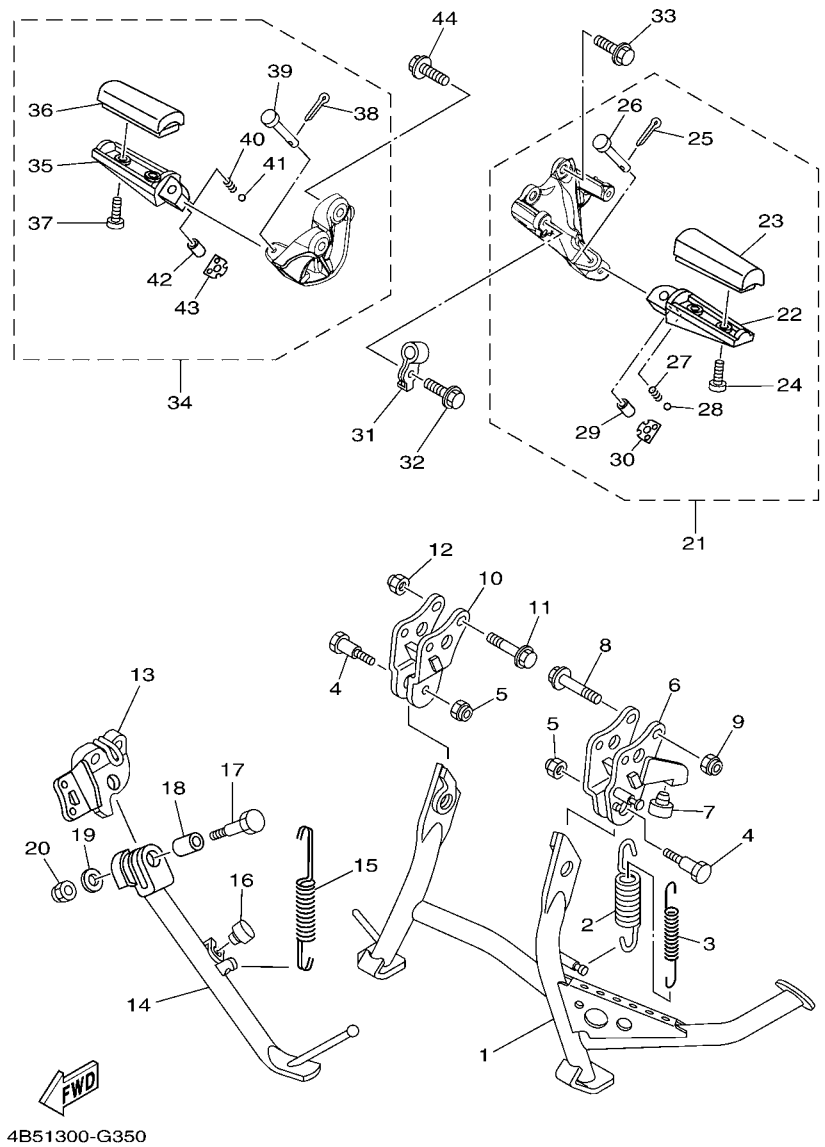

FIG. 35 STAND & FOOTREST

REF. NO.	PART NO.	DESCRIPTION	4B56					REMARKS
1	4B5–27111–00	STAND, MAIN	1					
2	90506–40508	SPRING, TENSION	1					
3	90506–23509	SPRING, TENSION	1					
4	90109–10029	BOLT	2					
5	90185–10022	NUT, SELF-LOCKING	2					
6	4B5–27151–00	BRACKET, MAIN STAND	1					
7	4X4–27114–00	STOPPER, MAIN STAND	1					
8	90105–10283	BOLT, FLANGE	2					
9	90185–10022	NUT, SELF-LOCKING	2					
10	4B5–27152–00	BRACKET, MAIN STAND 2	1					
11	90105–10283	BOLT, FLANGE	2					
12	90185–10022	NUT, SELF-LOCKING	2					
13	4B5–27321–00	BRACKET, SIDE STAND	1					
14	4B5–27311–00	STAND, SIDE	1					
15	90506–20027	SPRING, TENSION	1					
16	4X4–27114–00	STOPPER, MAIN STAND	1					
17	90101–10025	BOLT	1					
18	90387–10018	COLLAR	1					
19	92902–10200	WASHER	1					
20	95602–10100	NUT, U	1					
21	4B5–27430–00	REAR FOOTREST ASSY 1	1					
22	4DN–27431–01	.FOOTREST, REAR 1	1					
23	4BP–27413–00	.COVER, FOOTREST	1					
24	90157–05025	.SCREW, PAN HEAD	2					
25	91402–20012	.PIN, COTTER	1					
26	91702–06038	.PIN, CLEVIS	1					
27	90501–15001	.SPRING, COMPRESSION	1					

.maxclub.ru

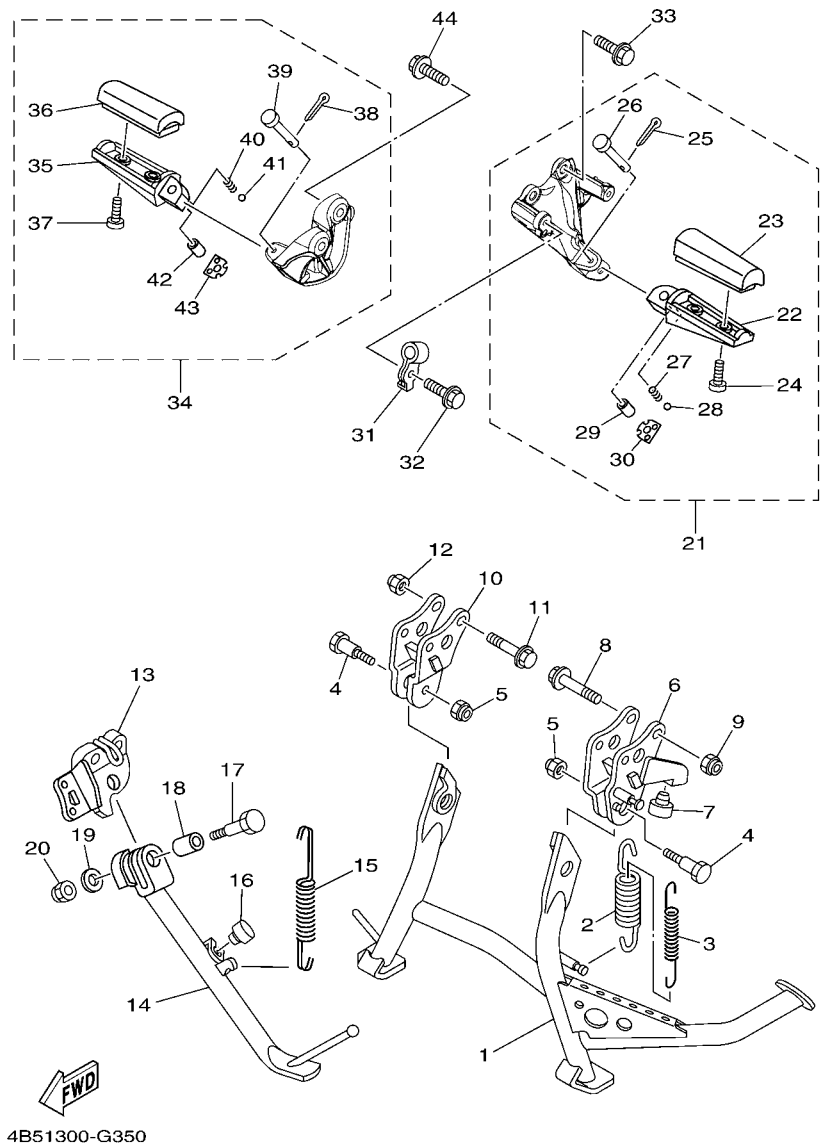

FIG. 35 STAND & FOOTREST

REF. NO.	PART NO.	DESCRIPTION	4B56					REMARKS
28	93501–04011	.BALL	1					
29	90387–064H8	.COLLAR	1					
30	4B5–27437–00	.WASHER, SPECIAL	1					
31	4B5–25876–00	HOLDER, BRAKE HOSE 2	1					
32	95802–06014	BOLT, FLANGE	1					
33	95812–08025	BOLT, FLANGE	2					
34	4B5–27440–00	REAR FOOTREST ASSY 2	1					
35	4DN–27441–01	.FOOTREST, REAR 2	1					
36	4BP–27413–00	.COVER, FOOTREST	1					
37	90157–05025	.SCREW, PAN HEAD	2					
38	91402–20012	.PIN, COTTER	1					
39	91702–06038	.PIN, CLEVIS	1					
40	90501–15001	.SPRING, COMPRESSION	1					
41	93501–04011	.BALL	1					
42	90387–064H8	.COLLAR	1					
43	4B5–27437–00	.WASHER, SPECIAL	1					
44	95812–08025	BOLT, FLANGE	2					

maxclub.ru

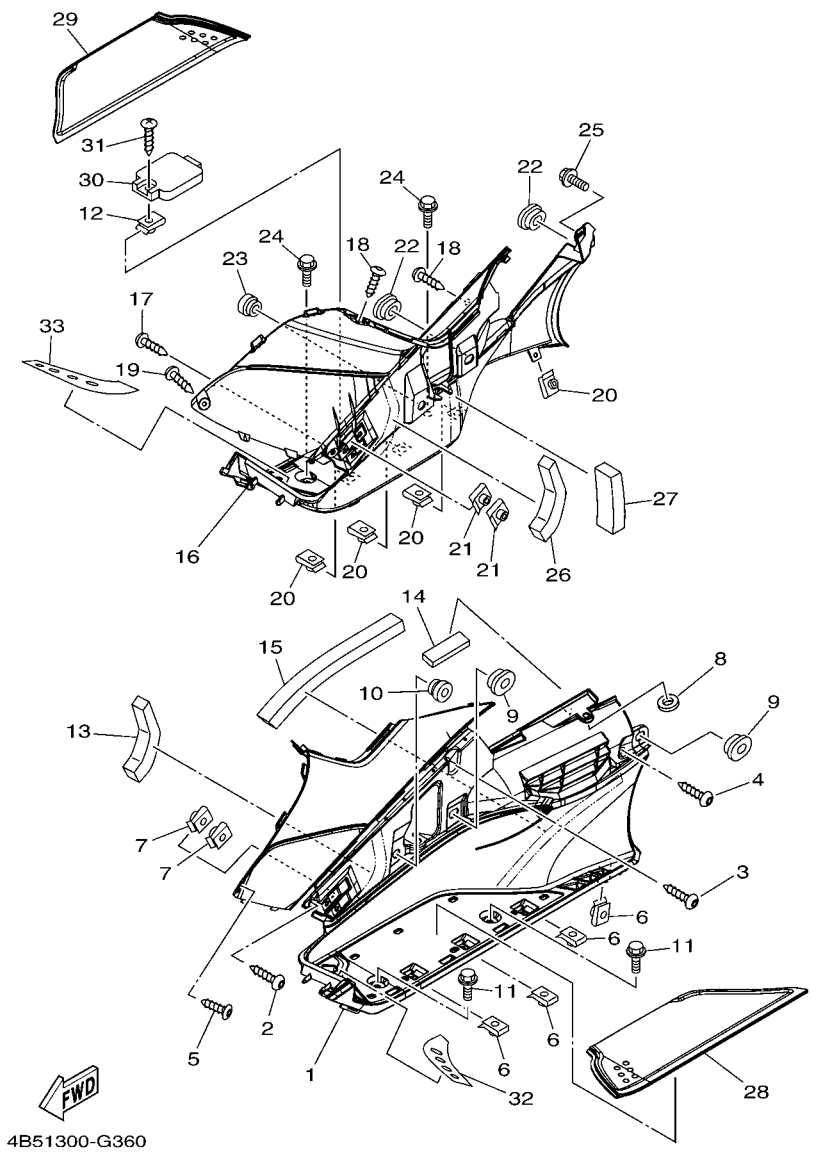

FIG. 36 STAND & FOOTREST 2

REF. NO.	PART NO.	DESCRIPTION	4B56					REMARKS
1	4B5–27481–00	BOARD, FOOTREST	1					
2	97702–50016	SCREW, TAPPING	1					
3	97702–50016	SCREW, TAPPING	1					
4	97702–50016	SCREW, TAPPING	2					
5	90167–05076	SCREW, TAPPING	1					
6	90183–05042	NUT, SPRING	4					
7	90183–060A6	NUT, SPRING	2					
8	4B5–27485–00	SEAL	1					
9	90480–01558	GROMMET	2					
10	90480–13567	GROMMET	1					
11	90119–06209	BOLT, WITH WASHER	2					
12	90183–05042	NUT, SPRING	1					
13	4B5–28217–00	DAMPER 1	1					
14	4B5–28247–00	DAMPER 4	1					
15	4B5–28267–00	DAMPER 5	1					
16	4B5–27488–00	BOARD, FOOTREST 2	1					
17	97702–50016	SCREW, TAPPING	1					
18	97702–50016	SCREW, TAPPING	2					
19	90167–05076	SCREW, TAPPING	1					
20	90183–05042	NUT, SPRING	5					
21	90183–060A6	NUT, SPRING	2					
22	90480–01558	GROMMET	2					
23	90480–13567	GROMMET	1					
24	90119–06209	BOLT, WITH WASHER	2					
25	90119–06235	BOLT, WITH WASHER	1					
26	4B5–28217–00	DAMPER 1	1					
27	4B5–28227–00	DAMPER 2	1					

maxclub.ru

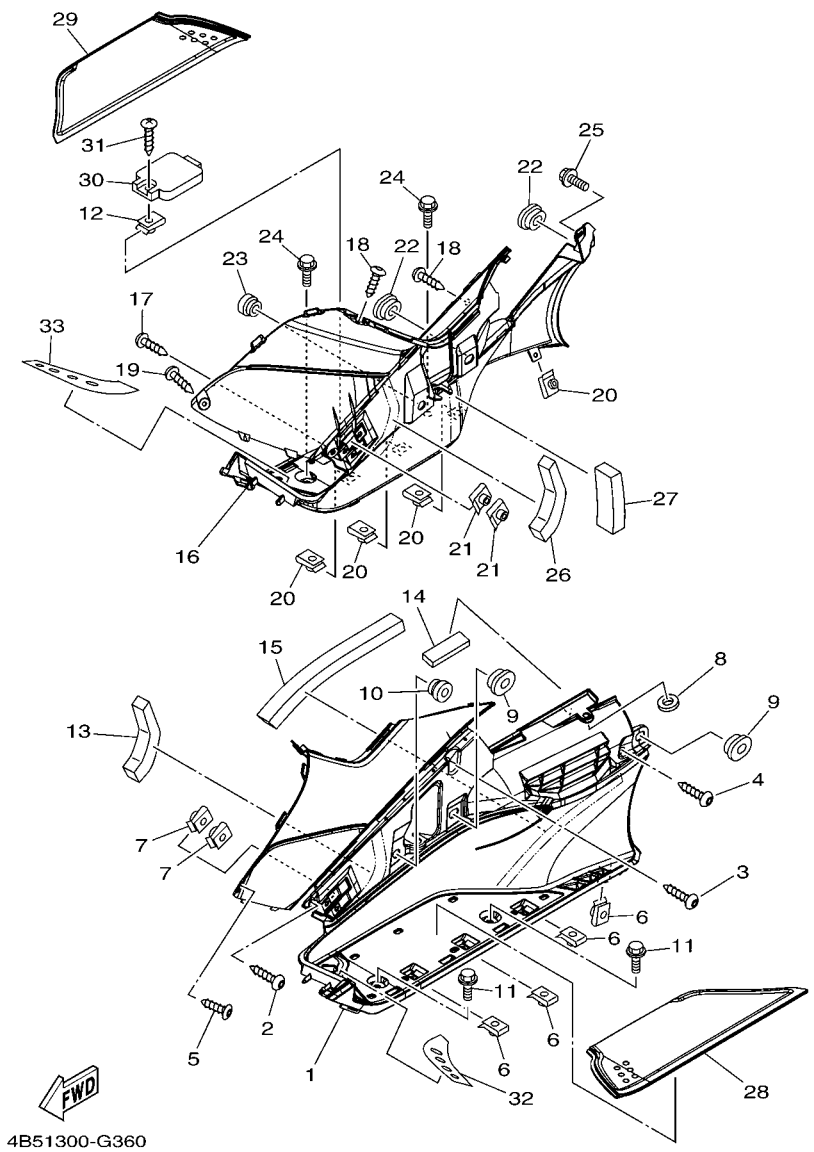

FIG. 36 STAND & FOOTREST 2

REF. NO.	PART NO.	DESCRIPTION	4B56					REMARKS
28	4B5–27483–00	MAT 1	1					
29	4B5–27484–00	MAT 2	1					
30	5GJ–27463–00	COVER 2	1					
31	97702–50016	SCREW, TAPPING	1					
32	4B5–27451–00	FOOTREST	1					
33	4B5–27461–00	FOOTREST	1					

.maxclub.ru

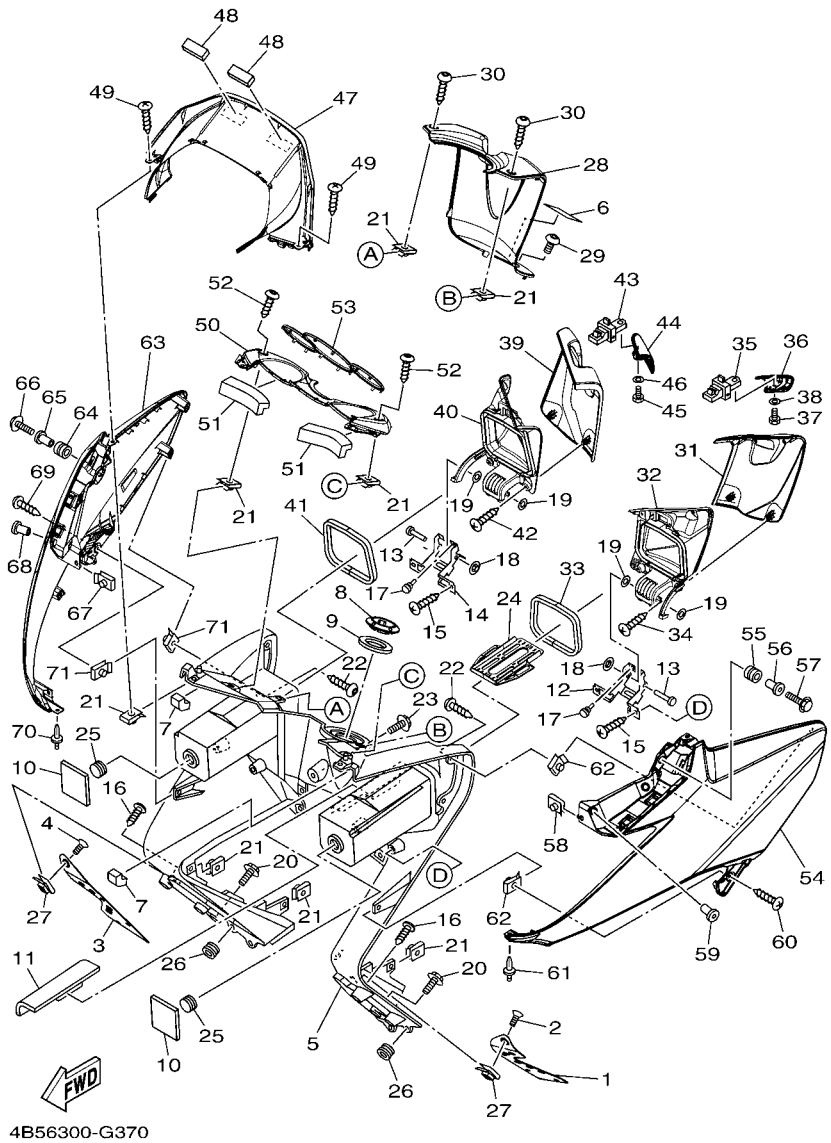

FIG. 37 LEG SHIELD

REF. NO.	PART NO.	DESCRIPTION	4B56					REMARKS
1	4B5–27411–00	FOOTREST 1	1					
2	90151–06052	SCREW, COUNTERSUNK	4					
3	4B5–27421–00	FOOTREST 2	1					
4	90151–06052	SCREW, COUNTERSUNK	4					
5	4B5–28311–00	LEG SHIELD 1	1					
6	5RU–21568–00	LABEL, WARNING	1					
7	4B5–2836U–01	DAMPER, LOCATING 2	2					
8	4B5–82552–00	CAP, SWITCH	1					
9	5VU–28307–00	SEAL	1					
10	4B5–28416–00	DAMPER 2	2					
11	4B5–2834V–00	PROTECTOR 1	1					
12	4B5–21796–00	HINGE	1					
13	90241–06002	PIN	2					
14	4B5–21797–00	HINGE	1					
15	90160–04008	SCREW, ROUND TAPPING	4					
16	97702–50016	SCREW, TAPPING	4					
17	90338–05009	PLUG	2					
18	90183–06008	NUT, SPRING	2					
19	90202–06004	WASHER, PLATE	4					
20	90119–06209	BOLT, WITH WASHER	2					
21	90183–05042	NUT, SPRING	16					
22	90167–05076	SCREW, TAPPING	4					
23	90119–06212	BOLT, WITH WASHER	2					
24	4B5–2839N–00	HOLDER	1					
25	90338–20113	PLUG	2					
26	90480–13567	GROMMET	2					
27	90183–060A8	NUT, SPRING	8					

maxclub.ru

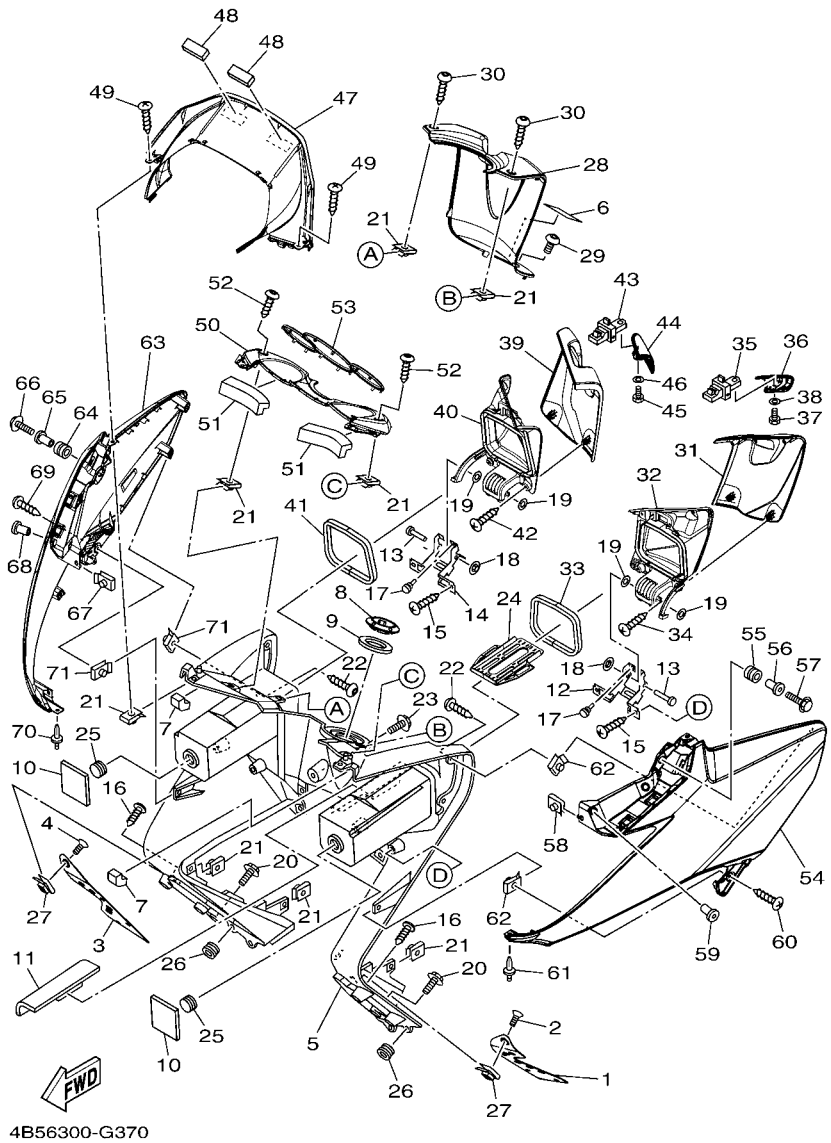

FIG. 37 LEG SHIELD

REF. NO.	PART NO.	DESCRIPTION	4B56					REMARKS
28	4B5–28312–00	LEG SHIELD 2	1					
29	90111–06095	BOLT,HEX. SOCKET BUTTON	1					
30	90169–05003	TAPPING SCREW	2					
31	4B5–28313–00	LID	1					
32	4B5–2836M–00	PANEL, INNER 3	1					
33	4B5–28371–00	DAMPER	1					
34	90160–04008	SCREW, ROUND TAPPING	4					
35	4B5–21780–00	LOCK ASSY	1					
36	4B5–2836X–00	KNOB, 1	1					
37	97022–05012	BOLT	1					
38	90201–05043	WASHER, PLATE	1					
39	4B5–2839K–00	LID 1	1					
40	4B5–2836N–00	PANEL, INNER 4	1					
41	4B5–28371–00	DAMPER	1					
42	90160–04008	SCREW, ROUND TAPPING	4					
43	4B5–21780–00	LOCK ASSY	1					
44	4B5–2836Y–00	KNOB, 2	1					
45	97022–05012	BOLT	1					
46	90201–05043	WASHER, PLATE	1					
47	4B5–2836K–00	PANEL, INNER 1	1					
48	4B5–2814E–00	HOOK	2					
49	97702–50016	SCREW, TAPPING	2					
50	4B5–28346–00	MOLE 2	1					
51	4B5–2834E–00	DAMPER 3	2					
52	90167–05076	SCREW, TAPPING	2					
53	4B5–2839R–00	PANEL, ACCESSORY	1					
54	4B5–28351–00–P0	BODY, COWLING	1					UR FOR MNM1

maxclub.ru

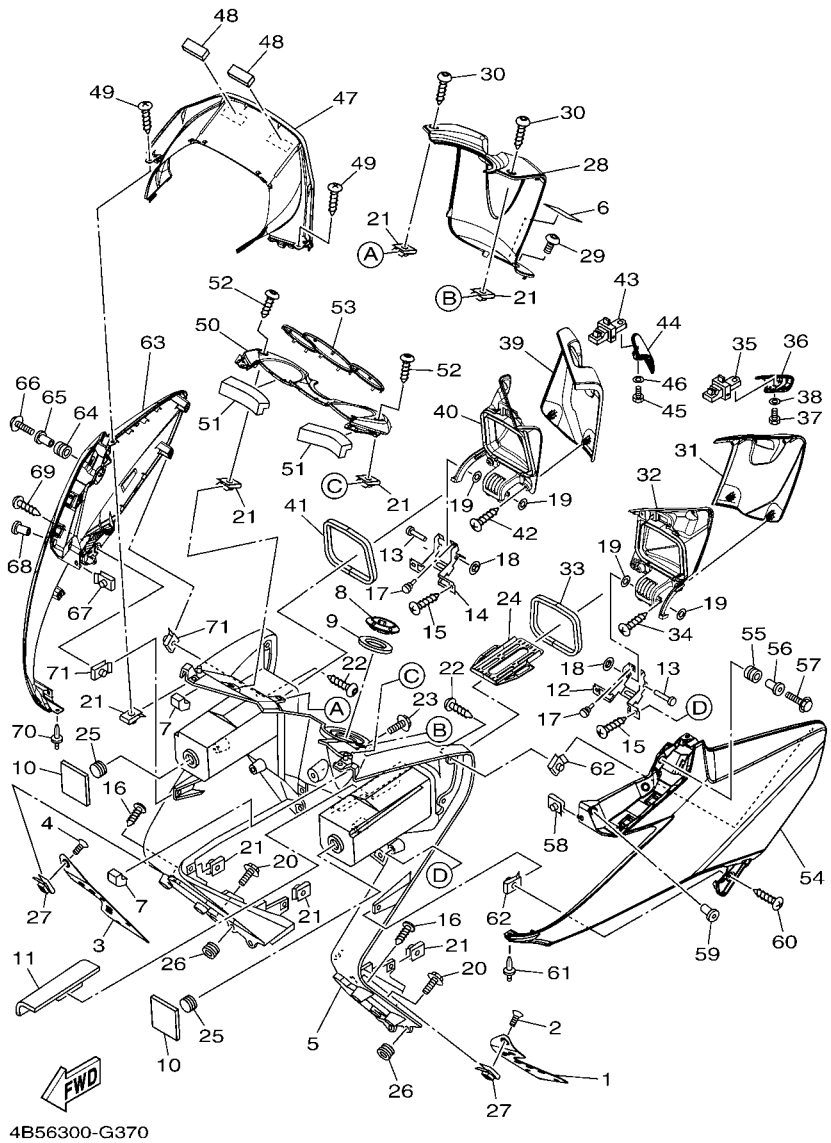

FIG. 37 LEG SHIELD

REF. NO.	PART NO.	DESCRIPTION	4B56					REMARKS
54	4B5–28351–00–P1	BODY, COWLING	1					UR FOR DPBMX
	4B5–28351–00–P2	BODY, COWLING	1					UR FOR S3
	4B5–28351–00–P3	BODY, COWLING	1					UR FOR SMX
55	90480–14003	GROMMET	1					
56	90387–0602X	COLLAR	1					
57	95802–06020	BOLT, FLANGE	1					
58	90183–060A6	NUT, SPRING	3					
59	90179–05523	NUT	2					
60	97702–50016	SCREW, TAPPING	1					
61	90269–06008	RIVET	1					
62	90183–05042	NUT, SPRING	3					
63	4B5–28377–00–P0	BODY, COWLING 2	1					UR FOR MNM1
	4B5–28377–00–P1	BODY, COWLING 2	1					UR FOR DPBMX
	4B5–28377–00–P2	BODY, COWLING 2	1					UR FOR S3
	4B5–28377–00–P3	BODY, COWLING 2	1					UR FOR SMX
64	90480–14003	GROMMET	1					
65	90387–0602X	COLLAR	1					
66	95802–06020	BOLT, FLANGE	1					
67	90183–060A6	NUT, SPRING	3					
68	90179–05523	NUT	2					
69	97702–50016	SCREW, TAPPING	1					
70	90269–06008	RIVET	1					
71	90183–05042	NUT, SPRING	3					

maxclub.ru

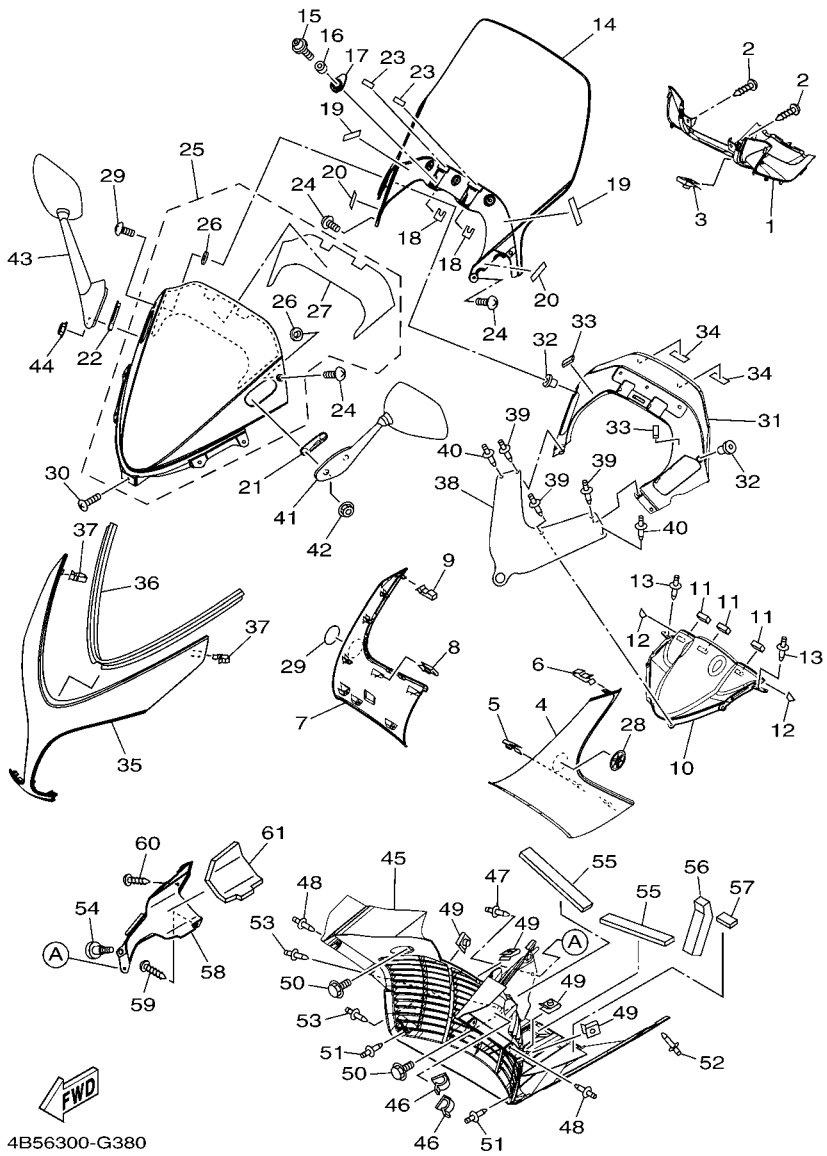

FIG. 38 WINDSHIELD

REF. NO.	PART NO.	DESCRIPTION	4B56					REMARKS
1	4B5–28365–00	COVER	1					
2	97702–50016	SCREW, TAPPING	2					
3	90183–060A6	NUT, SPRING	1					
4	4B5–2835U–00	PANEL 1	1					
5	90183–05042	NUT, SPRING	2					
6	5GM–28379–00	HOOK	4					
7	4B5–2835V–00	PANEL 2	1					
8	90183–05042	NUT, SPRING	2					
9	5GM–28379–00	HOOK	4					
10	4B5–2836L–00	PANEL, INNER 2	1					
11	4B5–2836T–00	DAMPER, LOCATING 1	3					
12	4B5–2846F–00	SEAL 4	2					
13	90269–06001	RIVET	2					
14	4B5–2837U–00	SCREEN	1					
15	90111–06105	BOLT,HEX. SOCKET BUTTON	2					
16	90387–06105	COLLAR	2					
17	4B5–28335–00	PLATE	2					
18	4B5–2844E–00	SEAL 3	2					
19	4B5–2847N–00	DAMPER 8	2					
20	4B5–2847F–00	SEAL 5	2					
21	4B5–28372–00	DAMPER	1					
22	4B5–2837K–00	DAMPER 6	1					
23	4B5–2847P–00	DAMPER 9	2					
24	90150–05024	SCREW, ROUND HEAD	5					
25	4B5–Y284S–10	COVER 5 ASSY	1					
26	4B5–28307–00	.SEAL	2					
27	4B5–2832P–00	.GRAPHIC 18	1					

.maxclub.ru

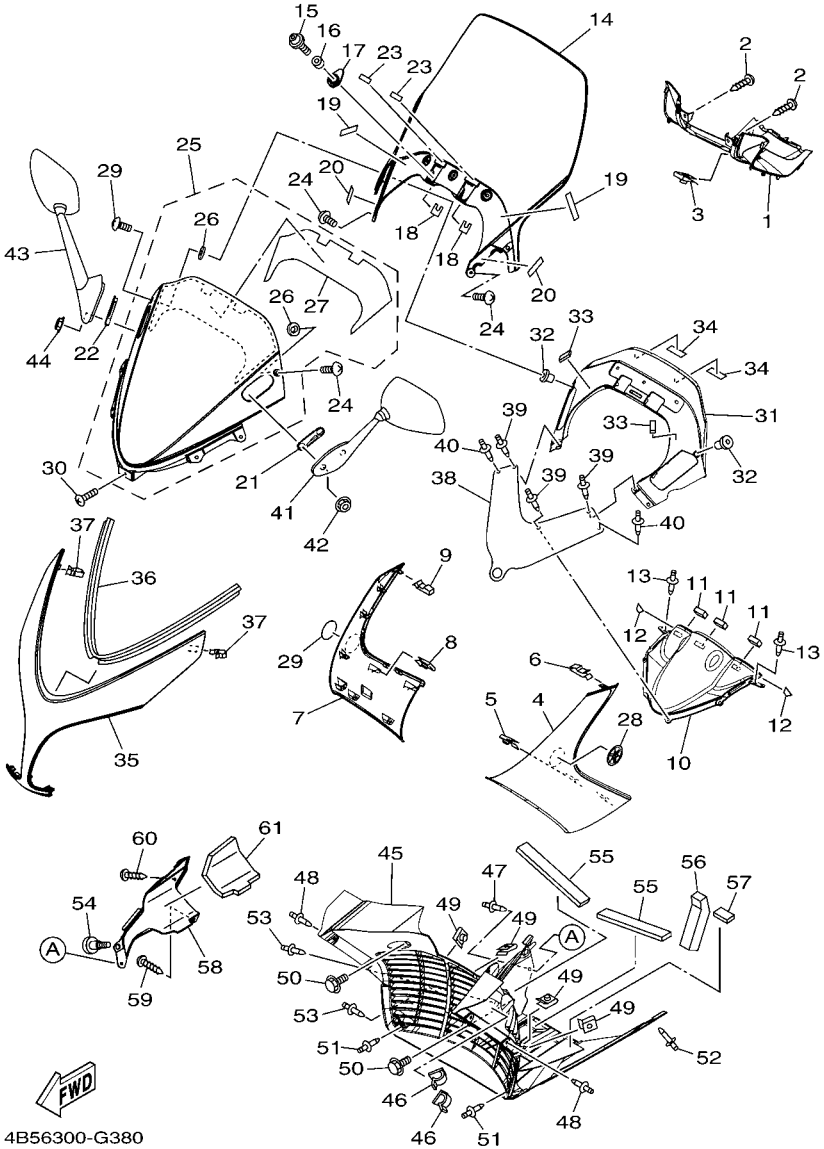

FIG. 38 WINDSHIELD

REF. NO.	PART NO.	DESCRIPTION	4B56					REMARKS
28	5PW–2413B–00	EMBLEM	1					
29	5PW–2413B–00	EMBLEM	1					
30	90150–05024	SCREW, ROUND HEAD	7					
31	4B5–2836R–00	PANEL, INNER 5	1					
32	90179–05523	NUT	2					
33	4B5–2847R–00	DAMPER 10	2					
34	4B5–2814H–00	HOOK 1	2					
35	4B5–22865–00–P0	COVER, FRONT	1					UR FOR MNM1
	4B5–22865–00–P1	COVER, FRONT	1					UR FOR DPBMX
	4B5–22865–00–P2	COVER, FRONT	1					UR FOR S3
	4B5–22865–00–P3	COVER, FRONT	1					UR MBL2 FOR SMX
36	4B5–28237–00	DAMPER 3	1					
37	5GM–28379–00	HOOK	2					
38	4B5–28336–00	PLATE	1					
39	90269–06008	RIVET	3					
40	90269–06008	RIVET	2					
41	4B5–26280–00	REAR VIEW MIRROR ASSY (LEFT)	1					
42	95702–06500	NUT, FLANGE	2					
43	4B5–26290–00	REAR VIEW MIRROR ASSY (RIGHT)	1					
44	95702–06500	NUT, FLANGE	2					
45	4B5–21557–00	DUCT, AIR	1					
46	90464–09009	CLAMP	2					
47	90269–06008	RIVET	1					
48	90269–06001	RIVET	4					
49	90183–05042	NUT, SPRING	4					
50	90119–06212	BOLT, WITH WASHER	2					
51	90269–06008	RIVET	2					

maxclub.ru

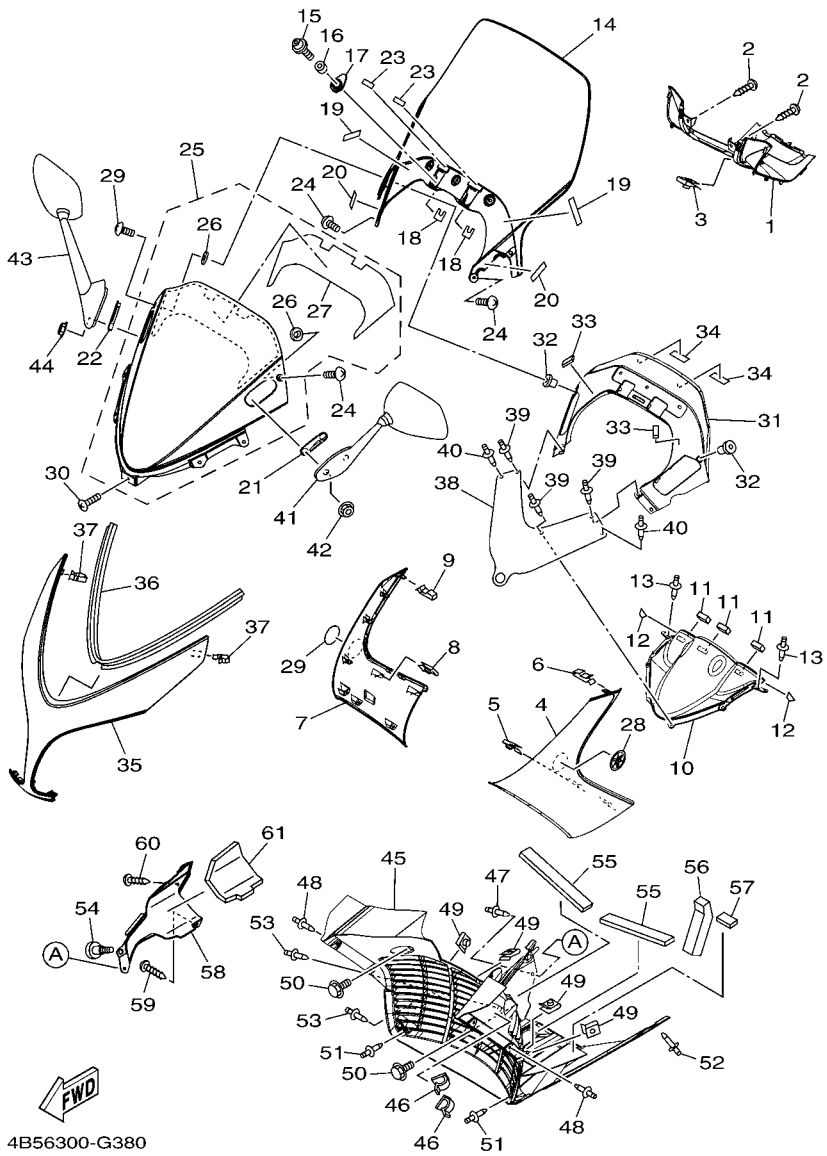

FIG. 38 WINDSHIELD

REF. NO.	PART NO.	DESCRIPTION	4B56					REMARKS
52	90269–06001	RIVET	1					
53	90269–06008	RIVET	2					
54	90109–05012	BOLT	1					
55	4B5–28415–00	DAMPER 1	2					
56	4B5–28425–00	DAMPER 3	1					
57	4B5–28435–00	DAMPER 4	1					
58	4B5–28395–00	COVER, UNDER	1					
59	90167–05076	SCREW, TAPPING	1					
60	90167–05076	SCREW, TAPPING	1					
61	4B5–2834F–00	DAMPER	1					

maxclub.ru

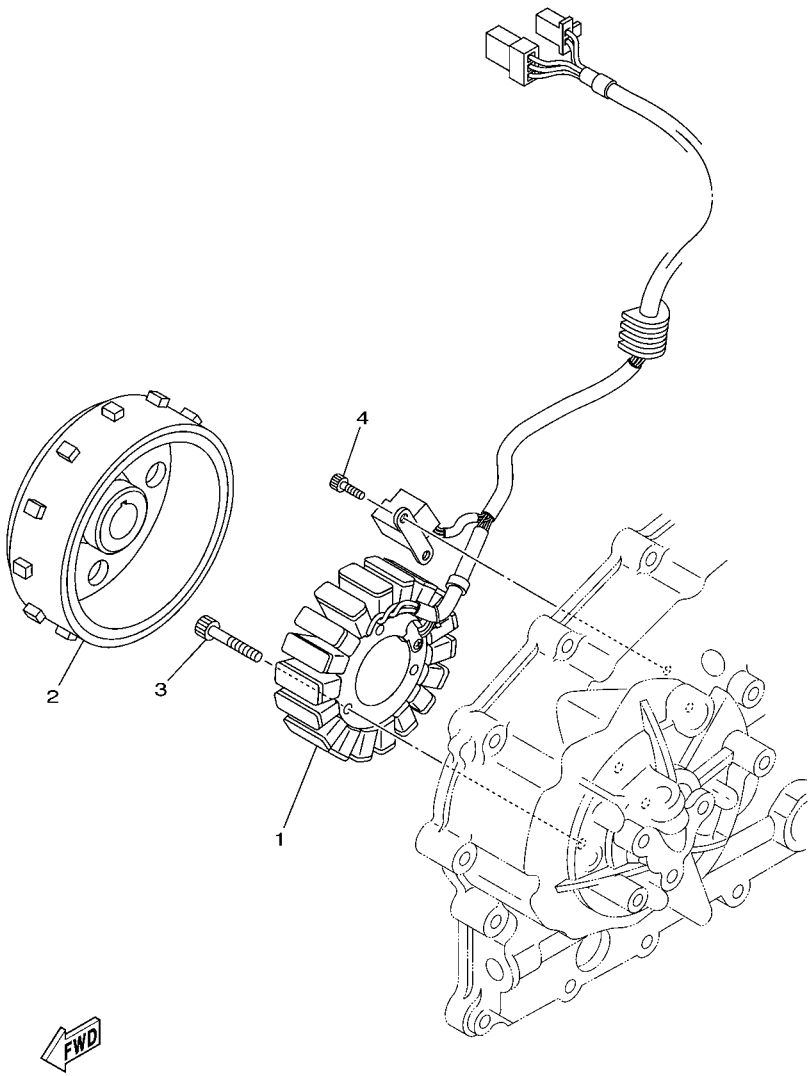

5VU1300-C380

FIG. 39 GENERATOR

REF. NO.	PART NO.	DESCRIPTION	4B56					REMARKS
1	4B5–81410–00	STATOR ASSY	1					
2	5VU–81450–00	ROTOR ASSY	1					
3	90110–06208	BOLT, HEXAGON SOCKET HEAD	3					
4	90110–05032	BOLT, HEXAGON SOCKET HEAD	2					

.maxclub.ru

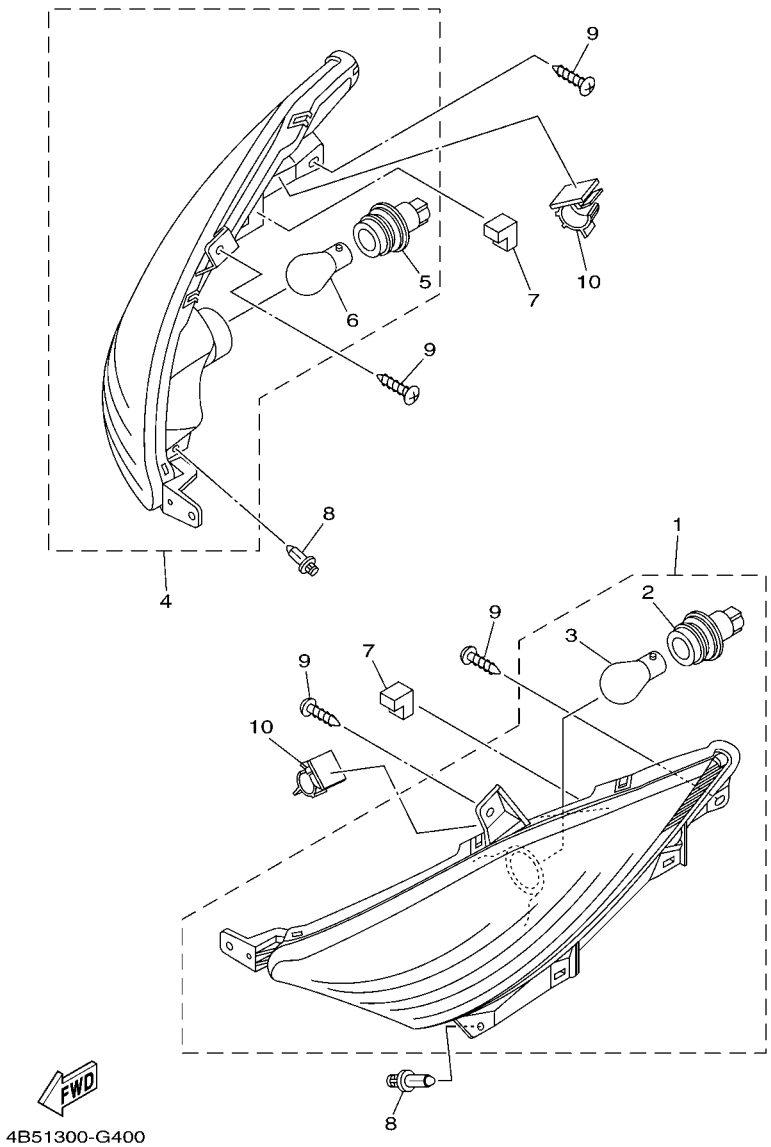

FIG. 40 FLASHER LIGHT

REF. NO.	PART NO.	DESCRIPTION	4B56					REMARKS
1	4B5–83310–00	FRONT FLASHER LIGHT ASSY 1	1					
2	4B5–8331J–00	.SOCKET COMP. 1	1					
3	5RU–83331–00	.BULB, FLASHER (12V-21W)	1					
4	4B5–83320–00	FRONT FLASHER LIGHT ASSY 2	1					
5	4B5–8331J–00	.SOCKET COMP. 1	1					
6	5RU–83331–00	.BULB, FLASHER (12V-21W)	1					
7	4B5–8338V–00	DAMPER	2					
8	90269–06001	RIVET	2					
9	97702–50016	SCREW, TAPPING	4					
10	90464–13004	CLAMP	2					

maxclub.ru

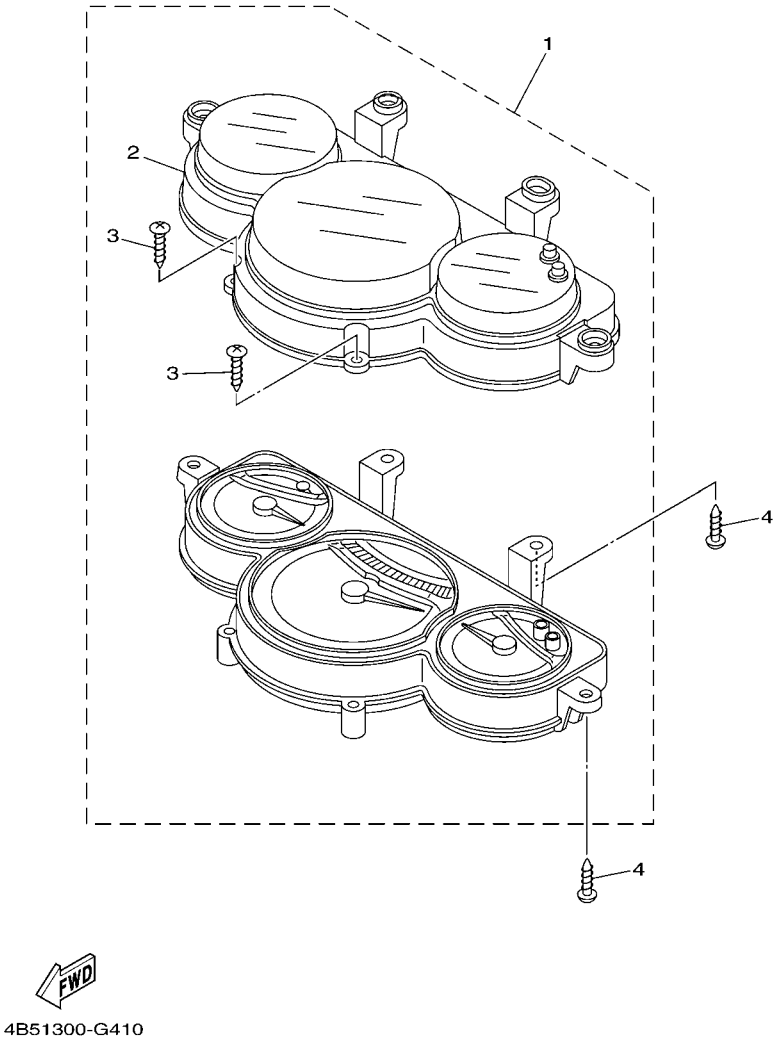

FIG. 41 METER

REF. NO.	PART NO.	DESCRIPTION	4B56					REMARKS
1	4B5–83500–10	METER ASSY (KM/H)	1					UR EXCEPT FOR GBR
	4B5–83500–50	METER ASSY (MPH)	1					UR FOR GBR
2	4B5–83511–00	.LENS, SPEEDOMETER	1					
3	4AS–83616–10	.SCREW, TAPPING	2					
4	97702–50016	SCREW, TAPPING	4					

.maxclub.ru

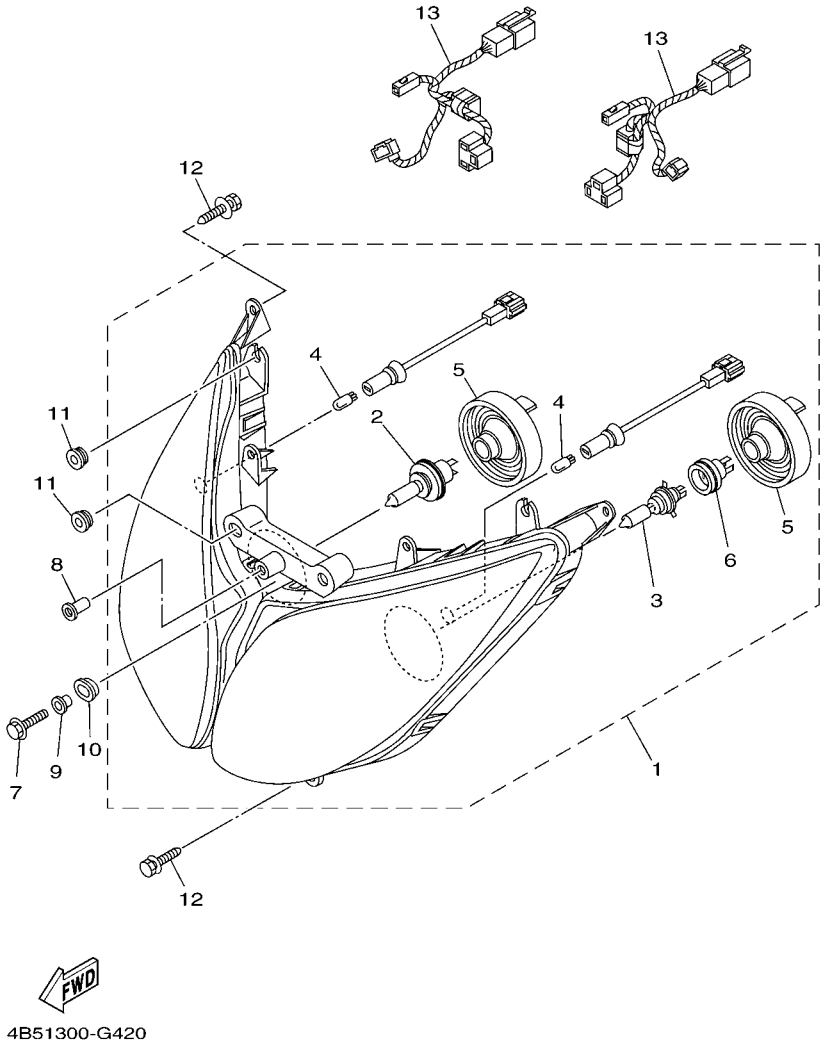

FIG. 42 HEADLIGHT

REF. NO.	PART NO.	DESCRIPTION	4B56					REMARKS
1	4B5–84310–01	HEADLIGHT UNIT ASSY	1					UR
	4B5–84310–11	HEADLIGHT UNIT ASSY	1					UR GBR,IRL,ZAF
2	4SV–84314–00	.BULB (12V-55W)	1					(H7)HALOGEN
3	8G9–84314–00	.BULB (12V-60/55W)	1					(H4)HALOGEN
4	4SV–84347–00	.BULB (12V-5W)	2					
5	5GJ–84397–00	.COVER, SOCKET	2					
6	4SV–84350–00	.SOCKET CORD ASSY 2	1					
7	95802–06020	BOLT, FLANGE	1					
8	90179–05523	NUT	1					
9	90387–06160	COLLAR	1					
10	90480–01559	GROMMET	1					
11	90480–13398	GROMMET	4					
12	90119–06156	BOLT, WITH WASHER	6					
13	4B5–84359–00	CORD, HEADLIGHT	2					

maxclub.ru

FIG. 43 TAILLIGHT

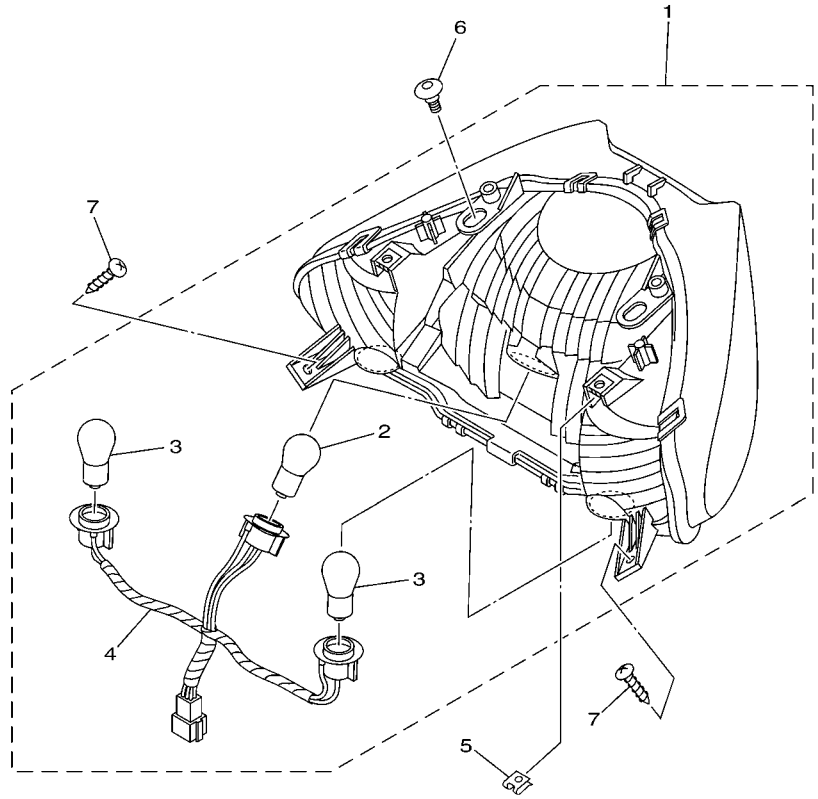

4B51300-G430

REF. NO.	PART NO.	DESCRIPTION	4B56					REMARKS
1	4B5–84710–01	TAILLIGHT UNIT ASSY	1					
2	137–84714–60	.BULB (12V-21/5W)	1					
3	5RU–83331–00	.BULB, FLASHER (12V-21W)	2					
4	4B5–84312–00	.CORD ASSY	1					
5	90183–05042	NUT, SPRING	1					
6	90109–06249	BOLT	2					
7	97702–50016	SCREW, TAPPING	2					

.maxclub.ru

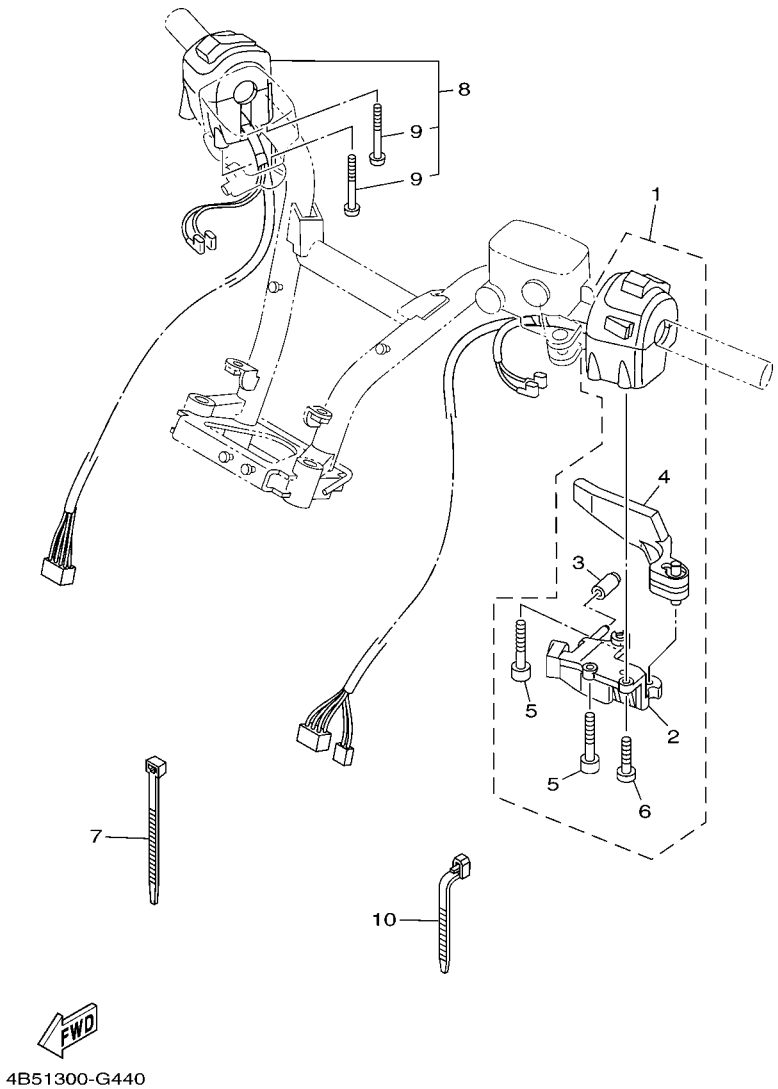

FIG. 44 HANDLE SWITCH & LEVER

REF. NO.	PART NO.	DESCRIPTION	4B56					REMARKS
1	4B5–83972–00	SWITCH, HANDLE 4	1					
2	5RB–26396–01	.HOLDER, ADJUSTING	1					
3	5RB–13569–00	.PLUG, BLIND	1					
4	5VU–83930–00	.LEVER LOCK ASSY	1					
5	91317–05055	.BOLT	2					
6	98507–05012	.SCREW, PAN HEAD	1					
7	90465–12356	CLAMP	3					
8	4B5–83963–00	SWITCH, HANDLE 3 (RIGHT)	1					
9	98507–05050	.SCREW, PAN HEAD	2					
10	90464–13073	CLAMP	1					

maxclub.ru

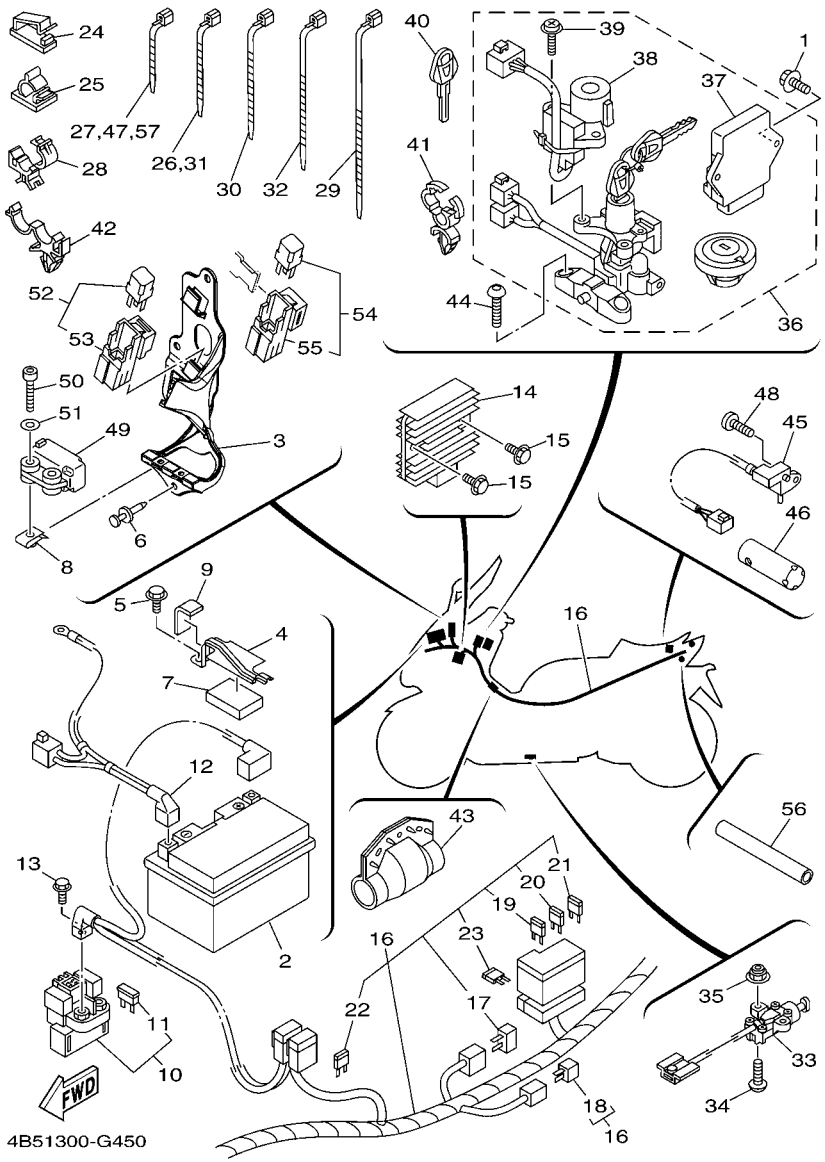

FIG. 45 ELECTRICAL 1

REF. NO.	PART NO.	DESCRIPTION	4B56					REMARKS
1	95802–06016	BOLT, FLANGE	2					
2	5VY–82100–00	BATTERY ASSY (YUASA YTZ10S)	1					
3	4B5–2143E–00	BRACKET, RELAY 1	1					
4	4B5–2199G–00	BRACKET, BATTERY	1					
5	95822–06010	BOLT, FLANGE	1					
6	90269–06081	RIVET	3					
7	5SJ–27482–00	MOLD, FOOTREST	1					
8	90183–04039	NUT, SPRING	2					
9	5H0–8235Y–M0	DAMPER	1					
10	4B5–81940–00	STARTER RELAY ASSY	1					
11	1AE–82151–00	.FUSE (30A-BL)	2					
12	4B5–82116–10	WIRE, MINUS LEAD	1					
13	95022–06008	BOLT, FLANGE	2					
14	4XY–81960–00	RECTIFIER & REGULATOR ASSY	1					
15	95802–06020	BOLT, FLANGE	2					
16	4B5–82590–10	WIRE HARNESS ASSY	1					UR
	4B5–82590–50	WIRE HARNESS ASSY	1					UR GBR,IRL,ZAF
17	4WA–81980–00	.DIODE ASSY	1					
18	3WP–81980–00	.DIODE ASSY	1					
19	5JJ–82151–10	.FUSE (15A-BL)	3					
20	5JJ–82151–20	.FUSE (20A-BL)	3					
21	5JJ–82151–30	.FUSE (10A-BL)	5					
22	5JJ–82151–60	.FUSE (30A-BL)	1					
23	5JJ–82151–90	.FUSE (5A-BL)	2					
24	90464–13011	CLAMP	4					
25	90464–13004	CLAMP	2					
26	90464–13073	CLAMP	1					

maxclub.ru

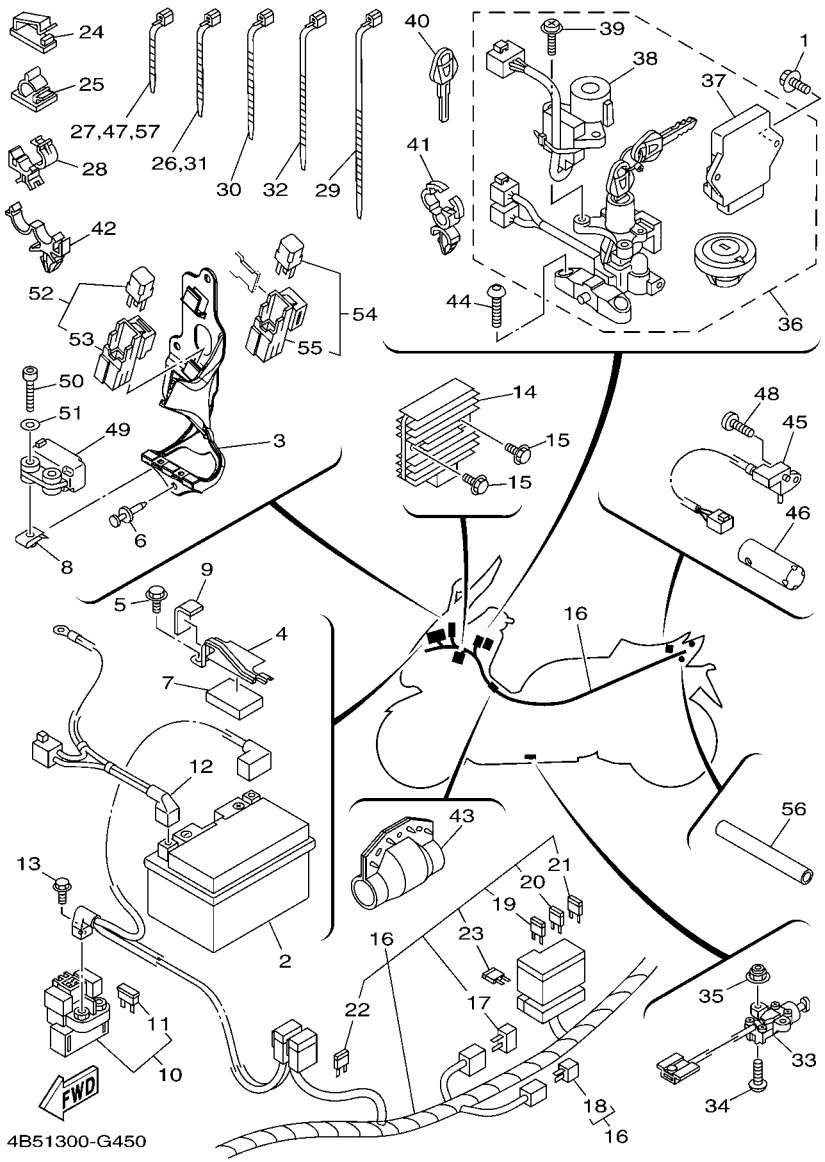

FIG. 45 ELECTRICAL 1

REF. NO.	PART NO.	DESCRIPTION	4B56					REMARKS
27	90464–13077	CLAMP	2					
28	90464–15192	CLAMP	1					
29	90460–15126	CLAMP, HOSE	1					
30	90464–15195	CLAMP	2					
31	90464–13073	CLAMP	1					
32	90464–12045	CLAMP	1					
33	4B5–82566–00	SWITCH, SIDE STAND	1					
34	92012–05020	BOLT, BUTTON HEAD	2					
35	95602–05200	NUT, SELF-LOCKING	2					
36	4B5–W8250–10	MAIN SW. IMMOBILIZER KIT	1					
37	4B5–8591A–10	.ENGINE CONTROL UNIT ASSY	1					
38	4B5–8255P–00	.IMMOBILIZER. UNIT COMP.	1					
39	5VU–82113–01	.SCREW	2					
40	5SL–82511–08	BLANK KEY	1					AP
41	90464–18246	CLAMP	1					
42	90464–16006	CLAMP	1					
43	5RU–8252U–00	COVER	1					
44	90149–08035	SCREW	2					
45	4B5–81860–00	SWITCH ASSY	1					
46	4B5–82599–00	COVER, CONNECTER	1					
47	90464–13077	CLAMP	1					
48	98902–03008	SCREW, BIND	1					
49	5VU–82576–01	LEAN ANGLE SENSOR	1					
50	91312–04025	BOLT	2					
51	90201–04325	WASHER, PLATE	2					
52	5EA–81950–20	RELAY ASSY	3					
53	5EA–81952–00	.HOLDER, RELAY	1					

maxclub.ru

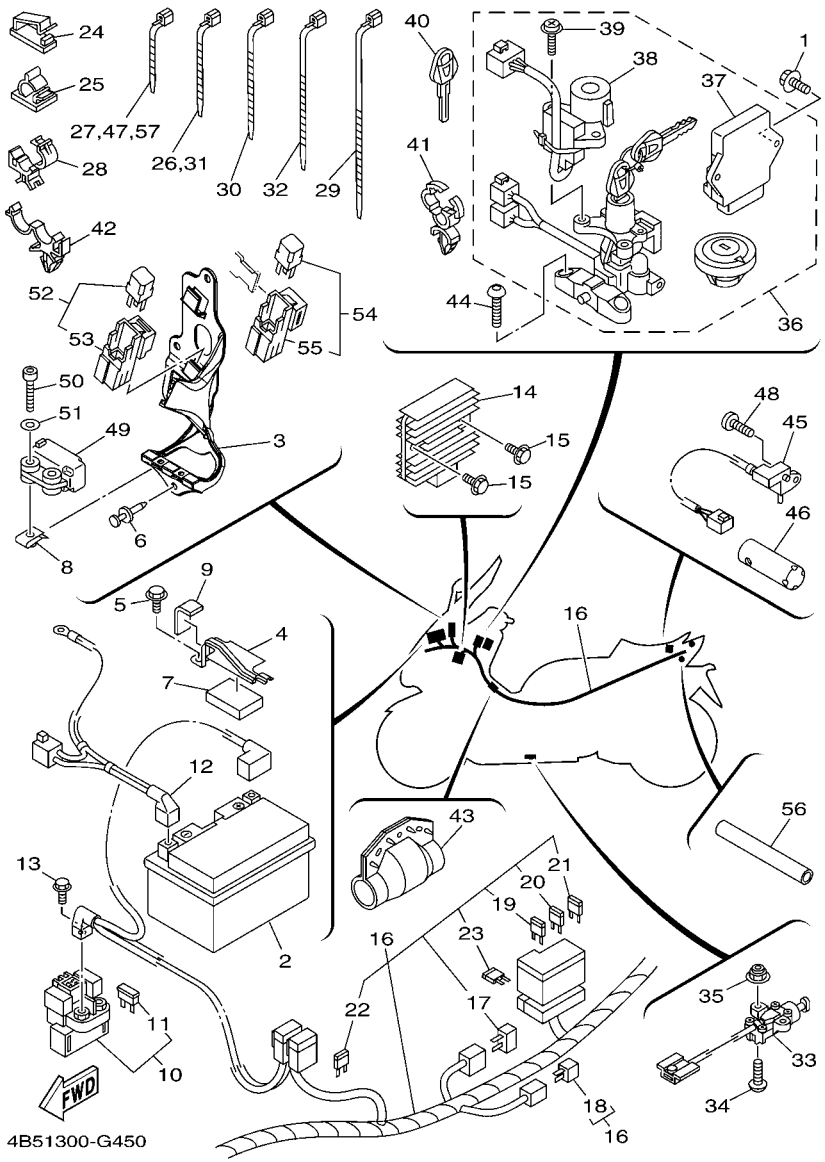

FIG. 45 ELECTRICAL 1

REF. NO.	PART NO.	DESCRIPTION	4B56					REMARKS
54	5JJ–81950–20	RELAY ASSY	1					
55	5JJ–81952–00	.HOLDER, RELAY	1					
56	90446–15377	HOSE	1					
57	90464–13077	CLAMP	1					

maxclub.ru

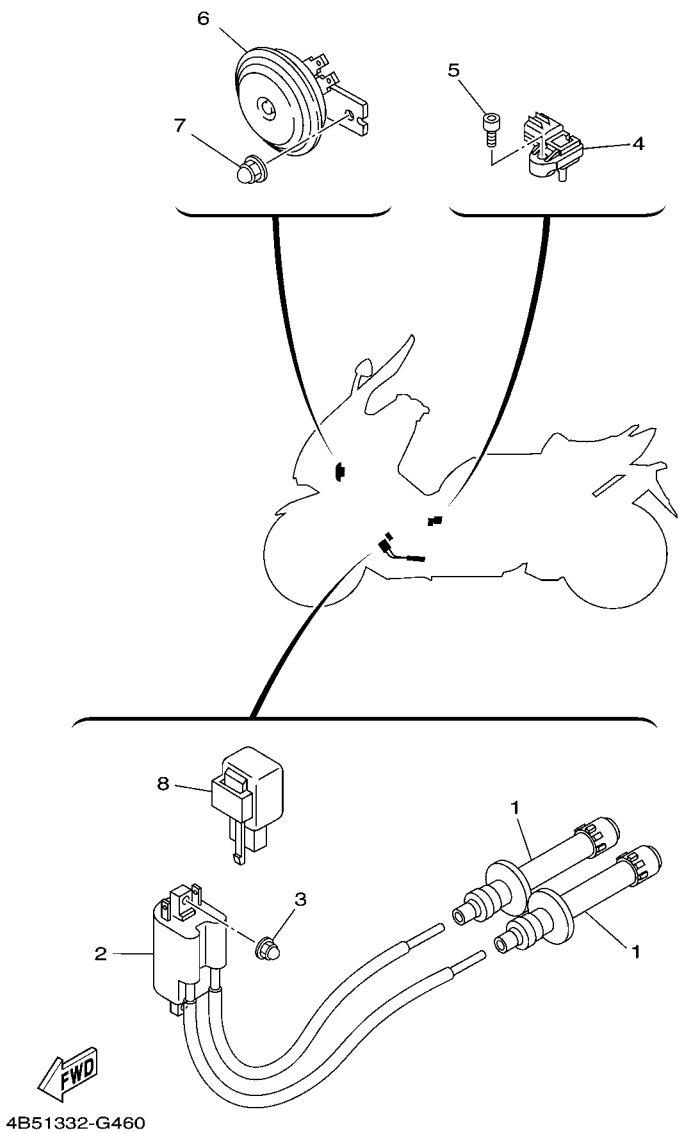

FIG. 46 ELECTRICAL 2

REF. NO.	PART NO.	DESCRIPTION	4B56					REMARKS
1	5VU–82370–00	PLUG CAP ASSY	2					
2	4B5–82320–00	IGNITION COIL ASSY	1					
3	90176–06014	NUT, CROWN	2					
4	2C0–82380–00	SENSOR, PRESSURE	1					
5	91312–05020	BOLT	1					
6	4B5–83371–00	HORN	1					
7	90176–08008	NUT, CROWN	1					
8	3GM–83350–01	FLASHER RELAY ASSY	1					

maxclub.ru

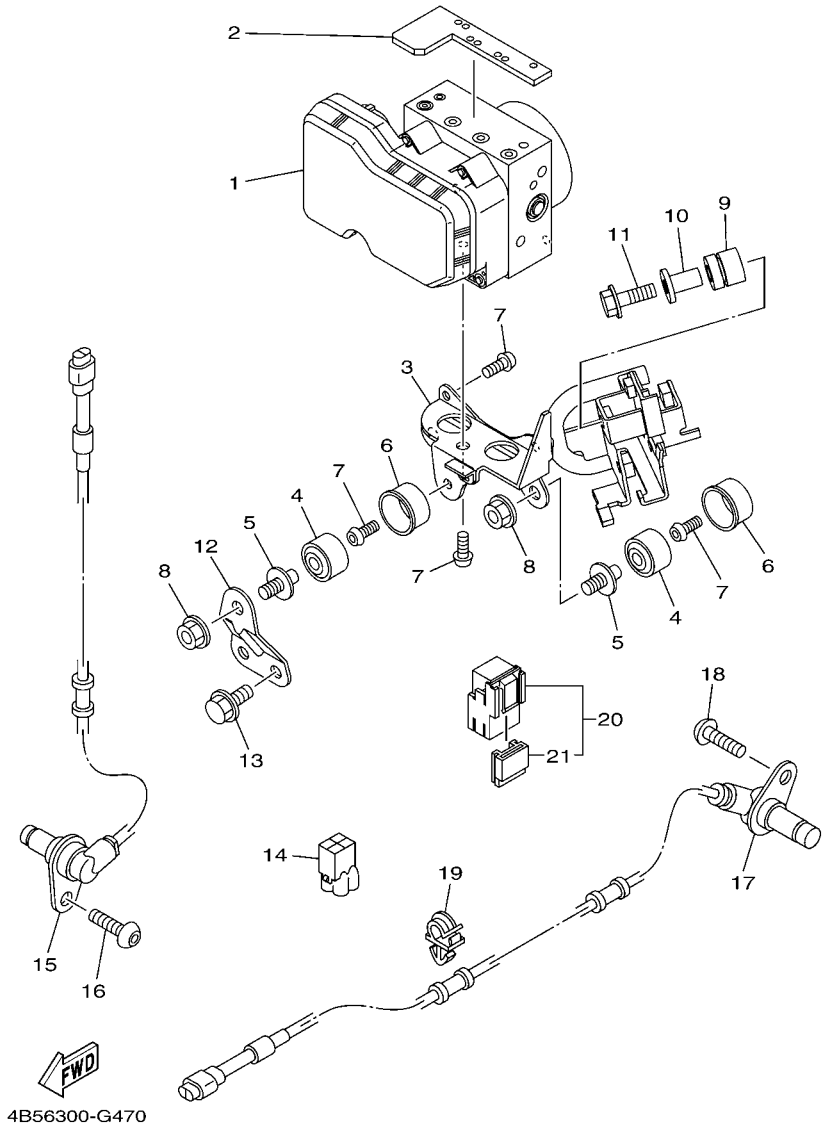

FIG. 47 ELECTRICAL 3

REF. NO.	PART NO.	DESCRIPTION	4B56					REMARKS
1	4B5–85930–09	HYDRAULIC UNIT ASSY	1					
2	4B5–21652–00	PROTECTOR	1					
3	4B5–2175T–00	BRACKET 1	1					
4	5CG–85113–00	DAMPER	3					
5	5CG–2535E–00	BOLT	3					
6	3P6–85916–00	CAP, DAMPER	3					
7	92012–06010	BOLT, BUTTON HEAD	6					
8	95702–08500	NUT, WITH WASHER	3					
9	90480–14182	GROMMET	1					
10	90387–08M25	COLLAR	1					
11	95822–08030	BOLT, FLANGE	1					
12	4B5–2175U–00	BRACKET 2	1					
13	95822–08012	BOLT, FLANGE	2					
14	3YA–82378–00	CONNECTOR	1					
15	4B5–85970–00	WHEEL SENSOR ASSY, FRONT	1					
16	92014–06014	BOLT, BUTTON HEAD	1					
17	4B5–85980–00	WHEEL SENSOR ASSY, REAR	1					
18	92014–06014	BOLT, BUTTON HEAD	1					
19	90464–08051	CLAMP	3					
20	5EA–81950–20	RELAY ASSY	1					
21	5EA–81952–00	.HOLDER, RELAY	1					

.yaxclub.ru

PART NO.	REF. NO.
4B5–11101–01	1 – 1
5GJ–11133–10	1 – 2
4B5–11166–00	1 – 19
5GJ–11181–00	1 – 17
15B–11190–00	1 – 18
5GJ–11193–01	1 – 22
5GJ–11195–00	1 – 23
812–11198–00	18 – 7
214–11198–01	11 – 7
5GJ–11312–00	2 – 19
5GJ–11351–01	1 – 27
5VU–11400–00	2 – 1
5GJ–11416–00	2 – 10
5GJ–11416–10	2 – 10
5GJ–11416–20	2 – 10
5GJ–11416–30	2 – 10
5GJ–11416–40	2 – 10
5GJ–11416–A0	2 – 10
5GJ–11417–00	2 – 11
5GJ–11417–10	2 – 11
5GJ–11417–20	2 – 11
5GJ–11417–30	2 – 11
5GJ–11417–40	2 – 11
5GJ–11417–A0	2 – 11
5GJ–11455–10	2 – 17
5GJ–11456–00	18 – 24
5GJ–11603–00	2 – 13
5VU–11631–00	2 – 12
5VU–11633–00	2 – 14
5GJ–11642–10–A0	2 – 16
5VU–11650–00	2 – 2
5VU–11654–00	2 – 3
4X7–11654–01	2 – 7
5GJ–11656–00	2 – 5
	2 – 9
5GJ–11656–10	2 – 5
	2 – 9
5GJ–11656–20	2 – 5
	2 – 9
5GJ–11656–30	2 – 5
	2 – 9
5GJ–11660–11	2 – 6
5GJ–12111–00	3 – 1
4GY–12113–00	3 – 4
1HX–12118–00	3 – 6
4TV–12119–00	3 – 7
5GJ–12121–01	3 – 2
5EB–12126–00	3 – 3

PART NO.	REF. NO.
5EB–12127–00	3 – 5
5EB–12153–09	3 – 9
5EB–12153–10	3 – 9
1HX–12168–00	3 – 8
1HX–12168–20	3 – 8
1HX–12168–40	3 – 8
1HX–12168–60	3 – 8
1HX–12168–80	3 – 8
1HX–12168–A0	3 – 8
1HX–12168–F0	3 – 8
1HX–12168–H1	3 – 8
1HX–12168–K1	3 – 8
1HX–12168–M1	3 – 8
1HX–12168–R1	3 – 8
1HX–12168–U1	3 – 8
1HX–12168–W1	3 – 8
1HX–12168–Y1	3 – 8
1HX–12169–11	3 – 8
1HX–12169–31	3 – 8
1HX–12169–50	3 – 8
1HX–12169–70	3 – 8
1HX–12169–90	3 – 8
1HX–12169–E0	3 – 8
1HX–12169–G0	3 – 8
1HX–12169–J0	3 – 8
1HX–12169–L0	3 – 8
1HX–12169–N0	3 – 8
1HX–12169–T0	3 – 8
5VU–12170–10	4 – 1
5VU–12180–10	4 – 2
15B–12210–00	4 – 5
15B–12213–00	4 – 6
5BE–12241–00	4 – 4
5VU–12251–00	4 – 8
5GJ–12252–00	4 – 9
4B5–12405–00	6 – 10
4JH–12410–00	6 – 3
4B5–12413–00	6 – 4
15B–12420–00	5 – 1
5VU–12421–00	5 – 2
5GJ–12422–02	5 – 7
11H–12438–10	5 – 5
1WG–12439–00	5 – 8
5GJ–1243A–00	6 – 26
4B5–1243E–00	6 – 27
4B5–1243F–00	8 – 31
4B5–1244G–00	8 – 33
5VU–12450–00	5 – 6

PART NO.	REF. NO.
4B5–12461–00	6 – 8
5SL–12462–00	6 – 23
4B5–12476–00	6 – 20
4B5–12477–00	6 – 21
5VU–12478–00	6 – 9
4B5–12481–00	5 – 14
4B5–12482–00	5 – 15
4B5–12483–00	6 – 1
4B5–12484–00	6 – 6
4B5–12485–00	6 – 19
5RU–12491–00	29 – 12
5Y9–12491–00	21 – 12
4B5–12551–00	6 – 34
5GJ–12589–00	6 – 33
5GJ–12591–00	6 – 24
5VU–12611–00	6 – 12
4B5–12620–00	6 – 11
5GJ–12675–00	6 – 14
3LD–13113–00	7 – 14
5GJ–13161–00	7 – 3
5GJ–13300–00	7 – 1
5GJ–13405–00	7 – 8
5GJ–13410–00	7 – 10
22F–13411–01	7 – 13
5DM–13440–00	7 – 21
4B5–13470–00	7 – 17
5JW–13473–00	7 – 18
5GJ–13475–00	7 – 6
4G0–13490–01	7 – 22
4B5–13545–00	8 – 27
15B–13556–00	8 – 25
5RB–13569–00	44 – 3
5VU–13586–00	8 – 1
5VU–13596–00	8 – 2
4B5–13750–00	9 – 1
4B5–13907–00	26 – 6
4B5–13930–00	8 – 22
5JW–14104–00	9 – 6
5CA–14147–00	8 – 23
84M–14169–00	9 – 2
8CC–14216–10	9 – 4
4B5–14411–00	8 – 7
4B5–14412–00	8 – 8
4B5–1441A–00	8 – 12
5CA–14435–00	8 – 20
4B5–14437–00	8 – 15
4B5–1443A–00	8 – 16
4B5–14451–00	8 – 17

PART NO.	REF. NO.
48U–14452–00	13 – 25
4B5–14452–00	8 – 9
4B5–14453–00	8 – 14
4B5–14457–00	8 – 10
4B5–14462–00	8 – 13
5VX–14503–00	9 – 5
4BR–14613–00	10 – 21
4B5–14629–00	10 – 9
4B5–1465R–00	10 – 5
5VU–1465T–00	10 – 6
5VU–1465U–00	10 – 7
4B5–14711–00	10 – 1
4B5–1471M–00	10 – 2
5GM–14766–00	10 – 12
5RU–14799–00	10 – 8
4B5–15100–00	11 – 1
5GJ–15113–00	13 – 9
36Y–15189–00	12 – 9
4H7–15189–00	1 – 29
	11 – 9
15B–15191–00	13 – 7
4B5–15316–00	12 – 19
5GJ–1531A–00	18 – 39
4B5–15326–00	13 – 26
4B5–15335–00	12 – 20
5GJ–15335–00	18 – 10
5GJ–15337–00	12 – 21
5VU–15338–00	18 – 11
2H7–15361–00	12 – 2
5GJ–15362–01	18 – 33
5GJ–15363–00	12 – 14
3ES–15371–00	18 – 38
4XM–15383–00	16 – 12
5GJ–15383–00	16 – 30
4B5–15407–00	13 – 1
5GJ–15408–00	13 – 24
5GJ–15411–02	12 – 1
5GJ–15414–00	12 – 3
4B5–15415–00	12 – 16
5GJ–15417–00	12 – 4
5GJ–15418–00	18 – 8
5GJ–15421–01	13 – 11
4B5–15423–00	13 – 21
5GJ–1542A–00	13 – 19
5GJ–1542B–00	13 – 27
5GJ–15431–00	13 – 8
5GJ–15451–01	12 – 11
5GJ–15453–01	12 – 6

PART NO.	REF. NO.
5GJ–15461–01	13 – 12
4B5–15473–00	13 – 3
5GJ–15474–00	13 – 6
15B–15481–00	11 – 6
3KJ–15481–00	12 – 18
	12 – 24
	13 – 20
	13 – 28
	13 – 31
	18 – 9
5GJ–15486–00	12 – 17
4B5–15492–00	13 – 18
5GJ–15499–10	12 – 22
	13 – 29
5GJ–15512–00	14 – 1
5GJ–15517–00	14 – 4
36Y–15521–01	14 – 2
4NK–15590–00	14 – 3
5GJ–15789–00	12 – 23
	13 – 30
5VU–16110–00	15 – 1
5GJ–16139–00	18 – 18
5VU–16151–00	17 – 2
5GJ–16321–10	15 – 11
5GJ–16324–00	15 – 13
5GJ–16325–10	15 – 12
5GJ–16334–00	15 – 16
5VU–16371–00	15 – 5
5GJ–16510–10	15 – 7
5GJ–16520–00	15 – 9
5GJ–16529–00	15 – 18
5GJ–16533–00	15 – 10
5GJ–16537–00	15 – 17
5GJ–16537–10	15 – 17
5GJ–16537–20	15 – 17
5GJ–16537–30	15 – 17
4B5–16539–00	15 – 14
5GJ–16540–00	15 – 8
5GJ–16550–00	15 – 15
5VU–17111–00	17 – 3
5GJ–17211–00	17 – 6
5VU–17411–00	17 – 1
5GJ–17421–00	17 – 5
5GJ–17451–00	18 – 16
5GJ–17452–00	18 – 20
5GJ–17459–00	18 – 21
5GJ–17469–00	18 – 25
5GJ–17523–00	18 – 19

PART NO.	REF. NO.
15B–17524–00	18 – 1
5GJ–17541–10	18 – 5
5GJ–17542–10	18 – 12
5GJ–17554–00	18 – 13
4B5–17611–00	16 – 8
5VU–17623–00	16 – 5
5VU–17632–00	16 – 4
5VU–17641–00	16 – 7
4WV–17644–00	16 – 22
5GJ–17649–00	16 – 9
5VU–17653–00	16 – 6
5VU–17660–00	16 – 15
4CW–17664–00	16 – 19
5GJ–17670–01	16 – 16
5VU–17681–00	16 – 25
5GJ–17690–00	16 – 21
5GJ–17818–02	18 – 14
4B5–21110–00	19 – 1
4B5–21116–00	19 – 18
4B5–2112C–00	19 – 14
4B5–2112J–00	19 – 44
4B5–2113B–00	19 – 3
4B5–21147–11	19 – 43
4B5–2117A–00	19 – 63
4B5–2117F–00	19 – 40
4B5–2117G–00	19 – 23
4B5–2117M–00	19 – 41
4B5–21190–00	19 – 10
4B5–2119A–00	19 – 59
5VX–21279–10	19 – 2
4B5–21345–00	19 – 61
4B5–21398–00	28 – 35
4B5–2139W–00	19 – 39
4B5–2141A–00	19 – 48
4B5–2141E–00	19 – 52
4B5–2142K–00	19 – 21
4B5–2143E–00	45 – 3
4B5–21445–00	19 – 19
4B5–2144H–00	19 – 55
4B5–2145H–00	19 – 57
4B5–21511–00–P0	20 – 1
4B5–21511–00–P1	20 – 1
4B5–21511–00–P2	20 – 1
4B5–21511–00–P3	20 – 1
4B5–2152R–00	22 – 25
4B5–2153E–00	20 – 9
3WF–2153E–40	20 – 9
3WF–2153E–70	20 – 9

www.tmzclub.ru

PART NO.	REF. NO.
4B5–21556–00	20 – 2
4B5–21557–00	38 – 45
5RU–21568–00	37 – 6
5VU–21578–00	20 – 10
5VU–21578–20	20 – 10
2TV–21639–00	28 – 31
4B5–2163A–00	28 – 30
4B5–21652–00	47 – 2
5VU–21668–00	28 – 36
4B5–21669–00	22 – 16
4B5–21711–00–P0	21 – 1
4B5–21711–00–P1	21 – 1
4B5–21711–00–P2	21 – 1
4B5–21711–00–P3	21 – 1
4B5–21717–00	21 – 3
	21 – 11
4B5–2171A–00–P0	21 – 18
4B5–2171A–00–P1	21 – 18
4B5–2171A–00–P2	21 – 18
4B5–2171A–00–P3	21 – 18
4B5–2171H–00	19 – 12
4B5–2171L–00–P0	22 – 19
4B5–2171L–00–P1	22 – 19
4B5–2171L–00–P2	22 – 19
4B5–2171M–00–P0	22 – 21
4B5–2171M–00–P1	22 – 21
4B5–2171M–00–P2	22 – 21
4B5–21721–00–P0	21 – 9
4B5–21721–00–P1	21 – 9
4B5–21721–00–P2	21 – 9
4B5–21721–00–P3	21 – 9
4B5–2172K–00	22 – 34
4B5–21731–00–P0	22 – 1
4B5–21731–00–P1	22 – 1
4B5–21732–00	22 – 2
	22 – 7
5GJ–2173B–20	21 – 2
	21 – 10
4B5–2173M–00	28 – 5
4B5–21741–00–P0	22 – 6
4B5–21741–00–P1	22 – 6
4B5–21747–00	21 – 8
	21 – 17
4B5–2174X–00	21 – 6
	21 – 15
4D9–2174X–00	19 – 11
4B5–2174Y–00	21 – 7
	21 – 16

PART NO.	REF. NO.
4JP–21753–00	26 – 17
4B5–2175N–00	21 – 22
4B5–2175T–00	47 – 3
4B5–2175U–00	47 – 12
4B5–2177B–00	21 – 24
4B5–21780–00	37 – 35
	37 – 43
4B5–21796–00	37 – 12
4B5–21797–00	37 – 14
1AA–21815–00	22 – 41
4B5–21816–00	22 – 43
4B5–21871–00	22 – 39
1AA–21874–00	22 – 42
4B5–2199G–00	45 – 4
15B–22141–00	23 – 4
1J7–22143–00	23 – 6
4B5–22171–10–33	23 – 1
4BH–2219X–00	23 – 7
5VU–22210–00	23 – 15
4B5–22243–00	23 – 18
4AA–22259–40	23 – 16
4B5–22426–00	23 – 13
4B5–22865–00–P0	38 – 35
4B5–22865–00–P1	38 – 35
4B5–22865–00–P2	38 – 35
4B5–22865–00–P3	38 – 35
4B5–23102–00	25 – 1
4B5–23103–00	25 – 18
4B5–23110–00	25 – 3
	25 – 20
3TJ–23111–00	25 – 16
	25 – 33
5WM–23118–00	25 – 15
	25 – 32
5EB–23125–00	25 – 5
	25 – 22
4B5–23126–00	25 – 2
4B5–23136–00	25 – 19
4B5–23141–00	25 – 13
	25 – 30
4PU–23144–00	25 – 9
	25 – 26
4PU–23145–01	25 – 7
	25 – 24
4V4–23146–L0	25 – 6
	25 – 23
3LR–23149–00	25 – 14
	25 – 31

PART NO.	REF. NO.
4V4–23153–L0	25 – 8
	25 – 25
509–23158–L0	25 – 11
	25 – 28
4B5–23170–00	25 – 4
	25 – 21
4YR–23173–00	25 – 10
	25 – 27
4B5–2317J–00	19 – 37
278–23181–50	25 – 12
	25 – 29
4V4–23188–L0	25 – 17
	25 – 34
4B5–23317–00	30 – 28
4PU–2331G–00	25 – 36
4B5–23340–00	25 – 37
4B5–23377–00	24 – 1
4XV–23415–01	24 – 9
5VY–23418–00	24 – 6
3FV–23462–00	25 – 40
4B5–23818–00	24 – 2
4B5–24110–00	26 – 1
4B5–24129–00	21 – 40
4B5–24135–00	26 – 23
5VU–24135–00	26 – 14
4B5–24139–00	21 – 41
5PW–2413B–00	38 – 28
	38 – 29
4B5–24141–00	26 – 20
4B5–2414A–00	26 – 16
5CA–2414G–01	26 – 11
3ME–2415E–01	21 – 45
5RB–24180–00	26 – 22
4B5–24181–00	26 – 4
4B5–24182–00	26 – 7
4B5–24184–00	26 – 8
4B5–24185–00	26 – 9
3VD–24188–00	19 – 34
4BP–24188–00	19 – 36
	26 – 5
31A–24188–01	19 – 13
4B5–24217–00	21 – 33
4B5–24313–00	26 – 19
4B5–24314–00	26 – 25
4B5–24318–00	26 – 18
4B5–24491–00	26 – 10
54K–24602–00	26 – 2
4B5–24718–00	27 – 5

PART NO.	REF. NO.
4CY–24722–00	27 – 9
4B5–24723–00	27 – 13
5SL–24723–00	27 – 7
4B5–24724–00	27 – 12
4B5–24726–00	27 – 14
4B5–24728–00	27 – 6
4B5–24730–00	27 – 1
4B5–24730–10	27 – 1
4B5–24731–00	27 – 2
4B5–24731–10	27 – 2
4B5–24737–00	28 – 2
4B5–2473F–00	21 – 27
4B5–2473R–00	28 – 1
4B5–2473T–00	21 – 28
22W–24741–00	19 – 32
4B5–24747–00	28 – 13
4B5–2474A–00–P0	28 – 14
4B5–2474A–00–P1	28 – 14
4B5–2474A–00–P2	28 – 14
4B5–2474A–00–P3	28 – 14
4B5–2474E–00	27 – 15
4B5–2474W–00–P0	28 – 18
4B5–2474W–00–P1	28 – 18
4B5–2474W–00–P2	28 – 18
4B5–2474W–00–P3	28 – 18
4B5–24752–00	27 – 10
5GJ–24754–00	21 – 30
4HC–24758–00	21 – 31
4B5–2475U–00	27 – 21
4B5–24762–00	21 – 36
4B5–24769–00	27 – 18
4B5–2476U–00	28 – 17
	28 – 21
5GJ–24774–00	21 – 35
4B5–24779–00	27 – 19
4B5–2477F–00	21 – 29
4B5–24780–00	28 – 22
4B5–2478D–00	28 – 25
4B5–2478G–00	27 – 23
4B5–24790–00	27 – 3
4B5–24790–10	27 – 3
4B5–24791–00	27 – 4
4B5–24791–10	27 – 4
4B5–2482H–00	28 – 11
5EA–25117–00	29 – 2
4B5–2514A–00	30 – 3
4B5–2517A–00	29 – 8
4XV–25181–10	29 – 9

PART NO.	REF. NO.
4B5–25183–00	29 – 11
4B5–25317–00	31 – 4
5VU–25333–00	33 – 1
5CG–2535E–00	47 – 5
5GJ–25366–00	31 – 9
4B5–25377–10	31 – 13
4B5–2537A–00	31 – 12
5GJ–25381–10	31 – 14
5VU–25383–A0	31 – 15
5MT–25398–00	29 – 7
	31 – 8
5MT–25398–10	29 – 7
	31 – 8
5MT–25398–20	29 – 7
	31 – 8
4B5–2580T–00	30 – 4
4B5–2580U–10	30 – 15
4B5–2580V–00	32 – 3
4B5–2581T–00	30 – 1
1J3–25824–00	30 – 13
5GM–25824–00	32 – 10
5VS–25824–00	30 – 24
1D7–25825–00	32 – 11
306–25825–01	30 – 14
	30 – 25
4B5–2582V–00	32 – 1
4B5–2584B–00	34 – 44
4B5–2584C–00	34 – 45
4B5–25852–00	34 – 3
	34 – 33
4B5–25854–00	34 – 5
	34 – 35
4B5–25855–00	34 – 4
	34 – 34
5VS–25867–00	34 – 11
	34 – 41
4B5–25873–00	34 – 17
4B5–25874–00	34 – 14
4B5–25875–00	34 – 25
4B5–25875–10	34 – 15
4B5–25876–00	35 – 31
4B5–25876–10	34 – 49
4B5–2587A–00	18 – 40
4B5–25882–00	34 – 28
4B5–25883–00	34 – 27
4B5–25886–00	34 – 23
4B5–2588B–00	34 – 53
4B5–2588C–00	34 – 54

PART NO.	REF. NO.
5VS–2589F–00	34 – 7
	34 – 37
5VS–2589H–00	34 – 6
	34 – 36
4D9–25914–10	32 – 6
13S–25919–00	30 – 10
	30 – 21
4TT–25919–00	32 – 9
4SV–25924–00	30 – 11
	30 – 22
3GM–25925–00	30 – 12
	30 – 23
4TT–25937–00	32 – 7
5GM–25975–00	32 – 12
5VS–25975–00	30 – 26
4B5–26110–10	33 – 4
4B5–26131–00	33 – 25
4B5–26143–00	33 – 18
4B5–26144–00	33 – 16
4B5–26145–00	33 – 19
4B5–2615E–00	34 – 30
4YR–26240–02	33 – 10
4YR–26241–02	33 – 9
3HX–26246–00	33 – 11
4B5–26279–00	13 – 17
4B5–26280–00	38 – 41
4B5–26290–00	38 – 43
4B5–26301–00	33 – 12
5VS–26332–00	34 – 10
	34 – 40
5RB–26396–01	44 – 2
4B5–27111–00	35 – 1
4X4–27114–00	35 – 7
	35 – 16
4B5–27151–00	35 – 6
4B5–27152–00	35 – 10
4B5–27311–00	35 – 14
4B5–27321–00	35 – 13
4B5–27411–00	37 – 1
4B5–27413–00	22 – 11
4BP–27413–00	35 – 23
	35 – 36
4B5–27421–00	37 – 3
4B5–27423–00	22 – 14
36Y–27424–01	10 – 18
4B5–27430–00	35 – 21
4DN–27431–01	35 – 22
4B5–27437–00	35 – 30

www.tm-club.ru

PART NO.	REF. NO.
4B5–27437–00	35 – 43
4B5–27440–00	35 – 34
4DN–27441–01	35 – 35
4B5–27451–00	36 – 32
4B5–27461–00	36 – 33
5GJ–27463–00	36 – 30
4B5–27475–00	22 – 4
4B5–27476–00	22 – 9
4B5–27481–00	36 – 1
5SJ–27482–00	45 – 7
4B5–27483–00	36 – 28
4B5–27484–00	36 – 29
4B5–27485–00	36 – 8
4B5–27488–00	36 – 16
4B5–28100–00	28 – 37
4B5–2814E–00	37 – 48
4B5–2814H–00	38 – 34
4B5–28217–00	36 – 13
	36 – 26
4B5–28227–00	36 – 27
4B5–28237–00	38 – 36
4B5–28247–00	36 – 14
4B5–28267–00	36 – 15
4B5–28307–00	38 – 26
5VU–28307–00	37 – 9
4B5–28311–00	37 – 5
4B5–28312–00	37 – 28
4B5–28313–00	37 – 31
4B5–2832P–00	38 – 27
4B5–28335–00	38 – 17
4B5–28336–00	38 – 38
5KE–28345–10	22 – 15
4B5–28346–00	37 – 50
4B5–2834E–00	37 – 51
4B5–2834F–00	38 – 61
4B5–2834V–00	37 – 11
4B5–28351–00–P0	37 – 54
4B5–28351–00–P1	37 – 54
4B5–28351–00–P2	37 – 54
4B5–28351–00–P3	37 – 54
4B5–28356–10	19 – 26
4B5–2835U–00	38 – 4
4B5–2835V–00	38 – 7
4B5–2835X–00	33 – 23
4B5–28365–00	38 – 1
4B5–2836K–00	37 – 47
4B5–2836L–00	38 – 10
4B5–2836M–00	37 – 32
4B5–2836N–00	37 – 40
4B5–2836R–00	38 – 31
4B5–2836T–00	38 – 11
4B5–2836U–01	37 – 7
4B5–2836X–00	37 – 36
4B5–2836Y–00	37 – 44
4B5–28371–00	37 – 33
	37 – 41
4B5–28372–00	38 – 21
4B5–28377–00–P0	37 – 63
4B5–28377–00–P1	37 – 63
4B5–28377–00–P2	37 – 63
4B5–28377–00–P3	37 – 63
3CV–28378–00	13 – 23
5GM–28379–00	38 – 6
	38 – 9
	38 – 37
4B5–2837J–00	6 – 16
4B5–2837K–00	38 – 22
4B5–2837U–00	38 – 14
4B5–28395–00	38 – 58
4B5–2839K–00	37 – 39
5GJ–2839M–00	28 – 4
4B5–2839N–00	37 – 24
4B5–2839R–00	37 – 53
4B5–28415–00	38 – 55
4B5–28416–00	37 – 10
4B5–28425–00	38 – 56
5GJ–28428–00	28 – 8
4B5–28435–00	38 – 57
4B5–2844E–00	38 – 18
4B5–28455–00	6 – 15
4B5–2846F–00	38 – 12
4B5–2847F–00	38 – 20
4B5–2847N–00	38 – 19
4B5–2847P–00	38 – 23
4B5–2847R–00	38 – 33
15B–46153–00	18 – 32
4B5–81410–00	39 – 1
5VU–81450–00	39 – 2
4B5–81815–00	14 – 13
4B5–81826–00	14 – 9
4XV–8182A–00	14 – 12
	14 – 14
4B5–81840–00	14 – 8
4B5–81844–00	14 – 10
1FK–81847–00	14 – 11
4B5–81860–00	45 – 45
4B5–81890–00	14 – 7
4B5–81940–00	45 – 10
5EA–81950–20	45 – 52
	47 – 20
5JJ–81950–20	45 – 54
5EA–81952–00	45 – 53
	47 – 21
5JJ–81952–00	45 – 55
4XY–81960–00	45 – 14
3WP–81980–00	45 – 18
4WA–81980–00	45 – 17
5VY–82100–00	45 – 2
5VU–82113–01	45 – 39
4B5–82116–10	45 – 12
3TJ–82131–00	28 – 38
1AE–82151–00	45 – 11
5JJ–82151–10	45 – 19
5JJ–82151–20	45 – 20
5JJ–82151–30	45 – 21
5JJ–82151–60	45 – 22
5JJ–82151–90	45 – 23
4B5–82320–00	46 – 2
5H0–8235Y–M0	45 – 9
5VU–82370–00	46 – 1
3YA–82378–00	47 – 14
2C0–82380–00	46 – 4
5SL–82511–08	45 – 40
5RU–8252U–00	45 – 43
4B5–82552–00	37 – 8
4B5–8255P–00	45 – 38
4B5–82566–00	45 – 33
5VU–82576–01	45 – 49
4B5–82583–00	28 – 7
4B5–82590–10	45 – 16
4B5–82590–50	45 – 16
4B5–82599–00	45 – 46
36Y–82917–00	34 – 12
4B5–83310–00	40 – 1
4B5–8331J–00	40 – 2
	40 – 5
4B5–83320–00	40 – 4
5RU–83331–00	40 – 3
	40 – 6
	43 – 3
3GM–83350–01	46 – 8
4B5–83371–00	46 – 6
4B5–8338V–00	40 – 7
4B5–83500–10	41 – 1
4B5–83500–50	41 – 1
4B5–83511–00	41 – 2
4AS–83616–10	41 – 3
4B5–83912–00	34 – 39
4B5–83922–00	34 – 9
5VU–83930–00	44 – 4
4B5–83963–00	44 – 8
4B5–83972–00	44 – 1
36Y–83980–01	34 – 42
4B5–84310–01	42 – 1
4B5–84310–11	42 – 1
4B5–84312–00	43 – 4
4SV–84314–00	42 – 2
8G9–84314–00	42 – 3
4SV–84347–00	42 – 4
4SV–84350–00	42 – 6
4B5–84359–00	42 – 13
5GJ–84397–00	42 – 5
4B5–84710–01	43 – 1
137–84714–60	43 – 2
4HC–84744–00	22 – 27
4B5–84745–00	22 – 26
4HC–84770–00	28 – 3
5CG–85113–00	47 – 4
3Y6–85130–02	22 – 31
5PS–85790–00	1 – 31
8GL–85885–00	9 – 3
5VU–85886–00	8 – 19
3P6–85916–00	47 – 6
4B5–8591A–10	45 – 37
4B5–8592A–00	10 – 20
4B5–85930–09	47 – 1
4B5–85970–00	47 – 15
4B5–85980–00	47 – 17
4B5–W0041–00	34 – 2
4B5–W0041–10	34 – 32
4B5–W0045–00	30 – 9
	30 – 20
5RU–W0046–00	32 – 8
5GJ–W0047–01	32 – 5
3GM–W0047–10	30 – 6
	30 – 17
3MA–W0047–10	30 – 8
	30 – 19
4D9–W0057–00	32 – 4
4SV–W0057–00	30 – 7
	30 – 18
4SV–W0057–10	30 – 5
4SV–W0057–10	30 – 16
15B–W1131–00	1 – 26
4B5–W1760–00	16 – 2
4B5–W2516–11	29 – 1
4B5–W2533–10	31 – 1
4B5–W2587–20	34 – 1
4B5–W2587–30	34 – 31
4B5–W8250–10	45 – 36
4B5–Y2343–00	24 – 12
4B5–Y284S–10	38 – 25
90101–10025	35 – 17
90101–16003	23 – 17
90105–06026	1 – 6
90105–10150	33 – 5
90105–10283	35 – 8
	35 – 11
90105–10638	30 – 27
	32 – 13
90105–12052	19 – 16
90105–12053	23 – 21
90105–12058	19 – 15
90105–12787	19 – 4
90109–05012	38 – 54
90109–06249	43 – 6
90109–064G6	30 – 2
	32 – 2
90109–10029	35 – 4
90110–05032	39 – 4
90110–06021	1 – 14
90110–06036	16 – 31
90110–06168	7 – 5
	7 – 12
90110–06200	22 – 12
	22 – 17
90110–06208	39 – 3
90110–06218	4 – 10
90110–08077	11 – 11
90110–08080	14 – 6
90110–10021	19 – 7
90110–10022	19 – 8
90111–06015	10 – 13
90111–06020	10 – 11
90111–06095	37 – 29
90111–06097	20 – 5
90111–06105	38 – 15
90111–06109	22 – 35
90111–10026	2 – 20
90111–10036	31 – 11
90116–09584	1 – 9
90119–05023	22 – 30
90119–06137	22 – 40
90119–06156	42 – 12
90119–06186	19 – 60
	19 – 62
90119–06193	24 – 3
90119–06200	26 – 3
90119–06209	36 – 11
	36 – 24
	37 – 20
90119–06212	37 – 23
	38 – 50
90119–06235	36 – 25
90149–06082	12 – 5
90149–06117	20 – 4
90149–08035	45 – 44
90150–05024	38 – 24
	38 – 30
90151–06024	16 – 13
90151–06052	37 – 2
	37 – 4
90157–05025	35 – 24
	35 – 37
90159–05032	33 – 17
90160–04008	37 – 15
	37 – 34
	37 – 42
90167–05076	22 – 20
	22 – 22
	36 – 5
	36 – 19
	37 – 22
	37 – 52
	38 – 59
	38 – 60
90167–05079	33 – 21
90169–05003	37 – 30
90170–16326	15 – 20
90170–18221	16 – 24
90170–28419	24 – 11
90170–36279	16 – 23
90170–48003	15 – 6
90176–06014	46 – 3
90176–06016	23 – 14
	27 – 16
90176–06017	28 – 33
90176–08008	46 – 7

www.tmzclub.ru

PART NO.	REF. NO.
90176–10075	10 – 25
90176–12002	19 – 5
90179–05523	19 – 31
	37 – 59
	37 – 68
	38 – 32
	42 – 8
90179–06018	33 – 3
90179–07652	2 – 4
90179–09003	1 – 13
90179–09379	2 – 8
90179–09612	1 – 12
90179–18007	2 – 22
90179–20013	16 – 14
90179–30691	24 – 7
90183–04039	45 – 8
90183–040A0	21 – 43
90183–05014	22 – 29
90183–05042	13 – 22
	21 – 5
	21 – 14
	21 – 44
	22 – 23
	28 – 6
	33 – 22
	36 – 6
	36 – 12
	36 – 20
	37 – 21
	37 – 62
	37 – 71
	38 – 5
	38 – 8
	38 – 49
	43 – 5
90183–05068	33 – 20
90183–050A6	22 – 24
90183–050A7	21 – 38
90183–05M02	21 – 23
	22 – 5
	22 – 10
90183–06008	37 – 18
90183–060A6	20 – 3
	36 – 7
	36 – 21
	37 – 58
	37 – 67
	38 – 3

PART NO.	REF. NO.
90183–060A8	37 – 27
90185–10022	35 – 5
	35 – 9
	35 – 12
90201–04325	45 – 51
90201–05043	22 – 32
	37 – 38
	37 – 46
90201–062G3	10 – 16
90201–090P4	1 – 11
90201–10037	19 – 9
90201–10043	10 – 23
	33 – 6
90201–12043	19 – 6
	23 – 24
90201–14022	31 – 16
90201–22018	23 – 5
90201–24017	15 – 19
90201–244A9	15 – 3
90201–25017	7 – 20
90201–25290	14 – 5
90201–28017	24 – 10
90202–06004	37 – 19
90202–30235	24 – 8
90241–06002	37 – 13
90249–12004	33 – 2
90269–06001	21 – 25
	21 – 26
	22 – 36
	22 – 37
	22 – 38
	38 – 13
	38 – 48
	38 – 52
	40 – 8
90269–06008	21 – 21
	37 – 61
	37 – 70
	38 – 39
	38 – 40
	38 – 47
	38 – 51
	38 – 53
90269–06081	28 – 32
	45 – 6
90269–07077	19 – 42
90280–05013	2 – 24
90338–05009	19 – 50

PART NO.	REF. NO.
90338–05009	37 – 17
90338–05056	8 – 18
90338–08174	1 – 7
90338–20113	37 – 25
90340–12006	18 – 6
90387–06023	10 – 15
90387–0602X	37 – 56
	37 – 65
90387–06105	38 – 16
90387–06153	20 – 6
90387–06160	42 – 9
90387–06170	28 – 10
	28 – 24
90387–062M9	24 – 4
90387–064H8	35 – 29
	35 – 42
90387–07020	6 – 18
90387–08068	28 – 15
	28 – 19
90387–08079	20 – 7
90387–08M25	47 – 10
90387–10018	35 – 18
90387–10046	10 – 19
90387–12003	23 – 22
90387–12039	23 – 23
90387–16019	23 – 19
90387–17011	23 – 10
90387–18001	2 – 23
90387–20018	15 – 4
90387–22016	29 – 10
90387–26001	16 – 26
90401–10172	34 – 21
	34 – 46
90401–20005	7 – 19
90430–08119	1 – 5
	11 – 12
90430–09002	8 – 24
90430–10005	34 – 22
	34 – 47
90430–12202	1 – 32
90445–08017	8 – 5
90445–09094	22 – 44
90446–15377	45 – 56
90450–01001	13 – 4
90450–32015	6 – 2
90450–47002	8 – 6
	8 – 21
90450–72005	13 – 5

PART NO.	REF. NO.
90460–15126	45 – 29
90464–07002	28 – 29
90464–08051	47 – 19
90464–09009	38 – 46
90464–10125	34 – 48
90464–10190	19 – 27
	19 – 30
	34 – 52
90464–10M38	26 – 26
90464–12045	45 – 32
90464–13004	40 – 10
	45 – 25
90464–13011	45 – 24
90464–13073	6 – 35
	44 – 10
	45 – 26
	45 – 31
90464–13077	19 – 49
	45 – 27
	45 – 47
	45 – 57
90464–14003	34 – 57
90464–15192	33 – 15
	33 – 24
	34 – 20
	34 – 51
	45 – 28
90464–15195	6 – 22
	45 – 30
90464–16006	45 – 42
90464–18246	45 – 41
90464–20015	8 – 30
90464–20181	34 – 56
90464–20191	19 – 53
	33 – 8
90464–25217	19 – 28
90464–30252	19 – 29
90464–32002	19 – 65
90465–12356	44 – 7
90467–090A2	22 – 45
	26 – 21
	26 – 27
90467–09120	6 – 32
90467–10035	6 – 31
	8 – 32
	8 – 34
90467–10038	6 – 30
90467–100A1	22 – 46

PART NO.	REF. NO.
90467–13133	1 – 20
90467–15001	6 – 28
90467–150A2	8 – 29
90467–15141	6 – 29
90467–16181	1 – 21
90467–17089	8 – 28
90468–040A0	21 – 20
90468–16001	27 – 24
90468–18121	27 – 17
90480–01558	19 – 33
	36 – 9
	36 – 22
90480–01559	42 – 10
90480–10332	10 – 10
90480–12581	10 – 14
90480–13003	19 – 45
90480–13018	26 – 15
90480–13398	42 – 11
90480–13567	36 – 10
	36 – 23
	37 – 26
90480–14003	37 – 55
	37 – 64
90480–14182	47 – 9
90480–16301	6 – 17
90501–104F9	7 – 16
90501–15001	35 – 27
	35 – 40
90501–600A0	16 – 20
90506–20027	35 – 15
90506–23509	35 – 3
90506–40508	35 – 2
90560–06201	19 – 46
90560–08066	28 – 34
90560–17306	31 – 18
91312–04025	45 – 50
91312–05020	46 – 5
91312–06016	34 – 16
91312–06020	4 – 7
	5 – 9
	8 – 4
91312–06035	1 – 25
91312–08020	18 – 3
91312–08030	24 – 13
91314–08025	25 – 38
91314–08040	25 – 35
91317–05055	44 – 5
91380–06012	10 – 3

PART NO.	REF. NO.
91402–20012	35 – 25
	35 – 38
91702–06038	35 – 26
	35 – 39
91808–16023	1 – 3
92012–05010	28 – 26
92012–05012	33 – 13
92012–05020	45 – 34
92012–06010	47 – 7
92012–06014	13 – 10
92012–06025	34 – 29
	34 – 55
92012–06050	7 – 2
92012–08020	27 – 20
	27 – 22
92012–08035	28 – 16
	28 – 20
92014–06014	22 – 3
	22 – 8
	47 – 16
	47 – 18
92902–05600	26 – 13
	28 – 28
92902–06600	5 – 13
	5 – 18
92902–08600	23 – 3
92902–10200	35 – 19
92990–06200	10 – 4
93101–30001	2 – 26
93101–35001	16 – 3
93102–12442	5 – 4
93102–15004	16 – 33
93102–25017	23 – 9
93102–25044	31 – 5
93102–25064	17 – 9
93102–40021	18 – 28
93102–42004	16 – 28
93102–44008	2 – 27
93102–48004	18 – 30
93102–55004	18 – 36
93104–41119	16 – 17
93105–45017	18 – 31
93106–28043	29 – 4
93210–06422	7 – 4
93210–09525	7 – 9
93210–10096	7 – 23
93210–14579	7 – 11
93210–16325	12 – 10

www.tmaxclub.ru

PART NO.	REF. NO.
93210–19123	12 – 15
	18 – 34
93210–21190	5 – 16
93210–22382	1 – 30
	11 – 10
93210–26001	16 – 27
93210–30611	16 – 10
93210–32738	8 – 3
93210–33133	5 – 11
93210–34504	18 – 26
93210–44545	16 – 18
93210–44704	31 – 10
93210–48364	11 – 8
93210–50553	18 – 2
93306–00106	5 – 3
93306–00420	29 – 3
93306–00713	16 – 11
93306–00807	18 – 27
93306–00808	18 – 29
93306–20331	31 – 2
93306–205A8	17 – 8
93306–20637	18 – 17
93306–20651	16 – 29
93306–30102	16 – 1
93306–30217	16 – 34
93306–30317	31 – 3
93306–30427	17 – 4
	18 – 23
93306–90602	2 – 25
93317–32493	15 – 2
93317–41761	23 – 20
93332–00010	23 – 8
93332–00086	18 – 4
93399–99932	24 – 5
93399–99957	25 – 39
93450–16068	2 – 18
93450–16159	2 – 15
93501–04011	35 – 28
	35 – 41
93505–08030	7 – 15
93603–50195	21 – 32
93608–30002	18 – 37
93608–60001	2 – 21
93612–16254	1 – 10
	1 – 28
93900–00030	29 – 6
	31 – 7
94112–15008	29 – 5

PART NO.	REF. NO.
94112–15009	29 – 5
94116–15011	31 – 6
94116–15012	31 – 6
94580–25058	7 – 7
94582–18132	4 – 3
94701–00353	1 – 16
95022–06008	45 – 13
95022–06012	6 – 7
95022–06014	28 – 12
95022–06025	6 – 5
	34 – 18
95022–06035	11 – 3
	12 – 8
	12 – 13
	13 – 16
	18 – 35
95022–06050	11 – 4
95022–06085	1 – 15
95022–08012	1 – 4
95022–08025	13 – 15
95022–08040	13 – 14
95022–08110	11 – 5
95602–05100	22 – 33
95602–05200	45 – 35
95602–06200	27 – 8
95602–08200	10 – 22
95602–10100	33 – 7
	35 – 20
95602–10200	19 – 20
95602–12200	19 – 17
	23 – 25
95602–14200	31 – 17
95612–08620	1 – 8
95617–06100	34 – 8
	34 – 38
95702–05500	6 – 13
95702–06500	34 – 19
	38 – 42
	38 – 44
95702–08500	47 – 8
95802–06010	19 – 24
	21 – 47
	33 – 26
	34 – 50
95802–06012	6 – 25
	34 – 24
	34 – 26
95802–06014	35 – 32

PART NO.	REF. NO.
95802–06016	20 – 8
	45 – 1
95802–06020	37 – 57
	37 – 66
	42 – 7
	45 – 15
95802–06025	19 – 25
	27 – 11
95812–06025	14 – 15
95812–06030	8 – 26
95812–08025	35 – 33
	35 – 44
95812–08030	19 – 22
	19 – 56
	19 – 58
95812–10040	10 – 24
95812–10100	23 – 12
95822–06010	45 – 5
95822–06012	19 – 64
95822–06016	19 – 47
	28 – 23
95822–06020	13 – 2
	28 – 9
95822–08012	47 – 13
95822–08016	19 – 51
	19 – 54
95822–08020	19 – 38
95822–08030	47 – 11
95822–10045	19 – 35
97002–05010	28 – 27
97002–05020	26 – 12
97002–08035	23 – 2
97022–05012	37 – 37
	37 – 45
97022–06016	5 – 17
97022–06030	5 – 12
97602–04214	34 – 13
	34 – 43
97702–40010	21 – 34
	21 – 42
97702–50014	26 – 24
97702–50016	21 – 4
	21 – 13
	21 – 39
	21 – 46
	22 – 13
	22 – 18
	36 – 2

PART NO.	REF. NO.
97702–50016	36 – 3
	36 – 4
	36 – 17
	36 – 18
	36 – 31
	37 – 16
	37 – 49
	37 – 60
	37 – 69
	38 – 2
	40 – 9
	41 – 4
	43 – 7
97702–50025	8 – 11
97707–40612	22 – 28
98502–05020	33 – 14
98507–05012	44 – 6
98507–05050	44 – 9
98902–03008	45 – 48
98902–05010	21 – 37
98980–06010	10 – 17
99009–12400	5 – 10
99009–25400	17 – 7
	18 – 22
99009–42500	16 – 32
99244–00080	21 – 19
99246–00080	21 – 19
99247–00080	21 – 19
99480–08020	13 – 13
99530–10114	11 – 2
	12 – 7
	12 – 12
	18 – 15
99530–10116	1 – 24
99530–14016	23 – 11

www.tmaxclub.ru